ZS-M50

SERVICE MANUAL

AEP Model
UK Model

Ver 1.0 1999.04

Dolby noise reduction manufactured under license from Dolby Laboratories Licensing Corporation.
"DOLBY" and the double-D symbol □□ are trademarks of Dolby Laboratories Licensing Corporation.

MD Section	Model Name Using Similar Mechanism	NEW
	MD Mechanism Type	MDM-3Z
	Optical Pick-up Type	KMS-260A
CD Section	Model Name Using Similar Mechanism	CFD-S27
	CD Mechanism Type	KSM-213CDM
	Optical Pick-up Type	KSS-213C

SPECIFICATIONS

CD player section

System
Compact disc digital audio system
Laser diode properties
Material: GaAlAs
Wave length: 785 nm
Emission duration: Continuous
Laser output: Less than 44.6 µW
(This output is the value measured at a distance of about 200 mm from the objective lens surface on the optical pick-up block with 7 mm aperture.)
Spindle speed
200 r/min (rpm) to 500 r/min (rpm) (CLV)
Number of programme positions
2
Frequency response
20 - 20,000 Hz +1/–2 dB
Wow and flutter
Below measurable limit

Radio section

Frequency range
FM: 87.5 - 108 MHz
MW: 531 - 1,602 kHz
LW: 153 - 279 kHz
IF FM: 10.7 MHz
MW/LW: 450 kHz
Aerials
FM: Telescopic aerial
External aerial terminal
MW/LW: External aerial terminals

MD player section

System
Minidisc digital audio system
Disc
MiniDisc
Laser diode properties
Material: GaAlAs
Wave length: 785 nm
Emission duration: Continuous
Laser output: Less than 44.6 µW
(This output is the value measured at a distance of about 200 mm from the objective lens surface on the optical pick-up block with 7 mm aperture.)
Recording/playback time
Maximum 74 minutes (with MDW-74)
Revolutions
400 rpm to 900 rpm (CLV)
Error correction
Advanced Cross Interleave Reed Solomon Code (ACIRC)
Sampling frequency
44.1 kHz
Coding
Adaptive TRansform Acoustic Coding (ATRAC)
Modulation system
EFM (Eight-to-Fourteen Modulation)
Number of programme positions
2 stereo programme positions

– Continued on page 2 –

PERSONAL MINIDISC SYSTEM

MICROFILM

SONY®

Frequency response
20 - 20,000 Hz +1/–2 dB
Signal-to-noise ratio
Over 80 dB (during playback)
Wow and flutter
Below measurable limit

General

Speaker
Full-range : 8 cm (3 in.) dia., 4 ohms cone type (2)
Inputs
LINE IN (stereo minijack): Sensitivity 436 mV/ 870 mV
Outputs
Headphones jack (stereo minijack) (1):
For 32 ohms impedance headphones
Maximum power output
7 W + 7 W
Power requirements
For personal minidisc system:
230 V AC, 50 Hz
For back-up memory:
4.5 V DC, 3 R6 (size AA) batteries
For remote controller:
3 V DC, 2 R6 (size AA) batteries
Power consumption
32 W

Dimensions (incl.projecting parts)
approx. 450 x 164 x 239.4 mm (w/h/d)
(17 ¾ x 6 ½ x 9 ½ inches)
Mass
approx. 6 kg (13 lb. 4 oz)
Supplied accessories
Mains lead (1)
Remote controller (1)
MW/LW loop aerial (1)

Design and specifications are subject to change without notice.

TABLE OF CONTENTS

Specifications 1

1. SERVICE NOTE 3

2. GENERAL 5

3. DISASSEMBLY
3-1. Cabinet (Front) Sub ASSY, Cabinet (Rear) Sub ASSY 7
3-2. Control (L) Board 8
3-3. Control (R) Board 8
3-4. Control (F) Board, JOG Board 8
3-5. BATT Board 9
3-6. Power Board 9
3-7. Tuner Board, Antenna SW Board 9
3-8. Center Block Section 10
3-9. Cabinet (Upper), Chassis (Main) 10
3-10. Optical Pick-up ASSY, CD Motor Board 11
3-11. Control SW Board 11
3-12. Motor Board, Belt, Motor (M703) 11
3-13. LCD Board, BL Board 12
3-14. Audio Board 12
3-15. Line Board 13
3-16. Main Board 13
3-17. MD Block ASSY 14
3-18. DG Board 14
3-19. Chassis (MD) 15
3-20. BD Board 15
3-21. Sub Chassis ASSY, MD Mechanism Deck 16
3-22. Shutter ASSY 16
3-23. SW Board 17
3-24. "Head, Over Write", Slider ASSY 17
3-25. MD Optical Pick-up Block 18

4. TEST MODE
4-1. Caution When Using the Test Mode 19
4-2. Test Mode Settings 19
4-3. Releasing the Test Mode 19
4-4. Basic Operations of the Test Mode 19
4-5. Selecting the Test Mode 19
4-6. Functions of Other Buttons 20
4-7. Test Mode Display 20

5. ADJUSTMENTS
MD Section 21
CD Section 24
Display Section 25
Tuner Section 26

6. DIAGRAMS
6-1. Explanation of IC Terminals 28
6-2. Block Diagram (Main Section) 35
6-3. Block Diagram (MD Section) 39
6-4. Printed Wiring Boards –Main Section – 43
6-5. Schematic Diagram –Main Section (1/3) – 47
6-6. Schematic Diagram –Main Section (2/3) – 51
6-7. Schematic Diagram –Main Section (3/3) – 55
6-8. Printed Wiring Boards –Audio Section – 58
6-9. Schematic Diagram –Audio Section – 61
6-10. Schematic Diagram –DG Section – 66
6-11. Printed Wiring Boards –DG Section – 71
6-12. Printed Wiring Boards –Tuner Section – 73
6-13. Schematic Diagram –Tuner Section – 75
6-14. Schematic Diagram –Control Section – 78
6-15. Printed Wiring Boards –Control Section – 81
6-16. Printed Wiring Boards –BD Section – 83
6-17. Schematic Diagram –BD Section – 85

7. EXPLODED VIEWS
7-1. Rear Cabinet Section 95
7-2. Front Cabinet Section 96
7-3. Center Block Section 97
7-4. Upper Cabinet Section 98
7-5. MD Section (1) 99
7-6. MD Section (2) 100
7-7. CD Optical Pick-up Section 101

8. ELECTRICAL PARTS LIST 102

SECTION 1
SERVICE NOTE

Flexible Circuit Board Repairing

- Keep the temperature of the soldering iron around 270°C during repairing.
- Do not touch the soldering iron on the same conductor of the circuit board (within 3 times).
- Be careful not to apply force on the conductor when soldering or unsoldering.

Notes on chip component replacement

- Never reuse a disconnected chip component.
- Notice that the minus side of a tantalum capacitor may be damaged by heat.

SAFETY-RELATED COMPONENT WARNING!!

COMPONENTS IDENTIFIED BY MARK ⚠ OR DOTTED LINE WITH MARK ⚠ ON THE SCHEMATIC DIAGRAMS AND IN THE PARTS LIST ARE CRITICAL TO SAFE OPERATION.
REPLACE THESE COMPONENTS WITH SONY PARTS WHOSE PART NUMBERS APPEAR AS SHOWN IN THIS MANUAL OR IN SUPPLEMENTS PUBLISHED BY SONY.

NOTES ON HANDLING THE OPTICAL PICK-UP BLOCK OR BASE UNIT

The laser diode in the optical pick-up block may suffer electrostatic breakdown because of the potential difference generated by the charged electrostatic load, etc. on clothing and the human body.
During repair, pay attention to electrostatic breakdown and also use the procedure in the printed matter which is included in the repair parts.
The flexible board is easily damaged and should be handled with care.

NOTES ON LASER DIODE EMISSION CHECK

The laser beam on this model is concentrated so as to be focused on the disc reflective surface by the objective lens in the optical pick-up block. Therefore, when checking the laser diode emission, observe more than 30 cm away from the objective lens.

LASER DIODE AND FOCUS SEARCH OPERATION CHECK

1. Close the lid for CD.
2. Press CD ▷II button.
3. Confirm the laser diode emission while observing the objecting lens. When there is no emission, Auto Power Control circuit or Optical Pick-up is broken.
   Objective lens moves up and down once for the focus search.

CAUTION DURING WHEN MOUNTING THE PULLEY FOR THE CD DOOR MOTOR (M703)

Make the following adjustment when mounting the CD door motor (part number : 1-763-224-11) and motor pulley (part number : 2-627-174-01) of the CD section.

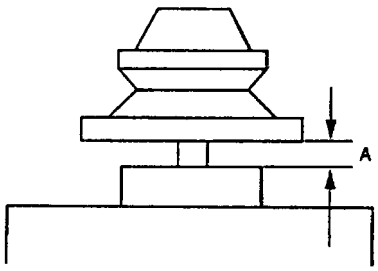

Specification : A = 0.9 to 1.1mm

CHUCK PLATE JIG ON REPAIRING

On repairing CD section, playing a disc without the CD lid, use Chuck Plate Jig.
• Code number of Chuck Plate Jig : X-4918-255-1

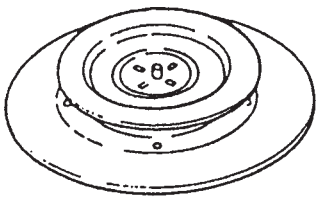

ABOUT THE BD BOARD WAVEFORM CHECKING JIG

The special jig (J-2501-124-A) is highly convenient when checking the waveform of the BD board of the MD section. Pin names and items to check are as follows:

I+3V : for IOP measurement (check for depleted optical pickup laser)
IOP : for IOP measurement (check for depleted optical pickup laser)
TEO : TRK error signal (traverse adjustment)
VC : Standard level for checking signals
RF : RF signal (jitter check)

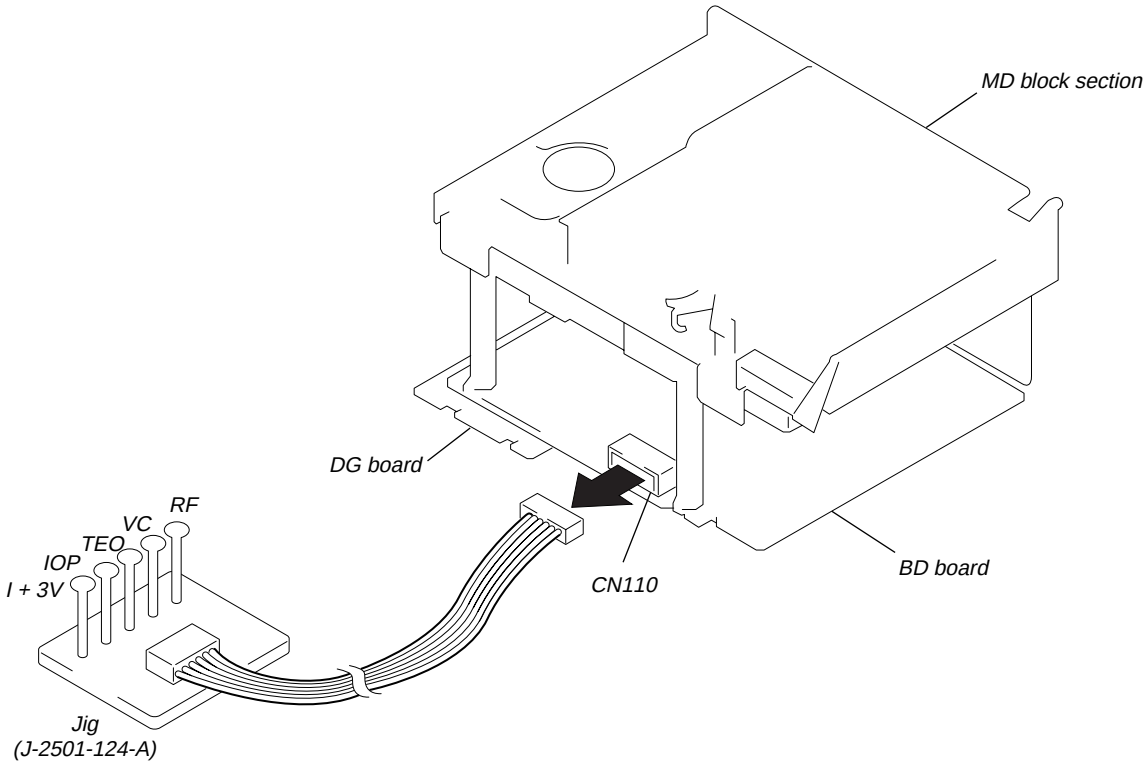

ABOUT THE HARDWARE RESET

It is possible to reset the system microcomputer by pressing the RESET button located on the bottom with a pointed object. Use this button when the unit cannot be operated properly due to such problems as microcomputer errors, etc.

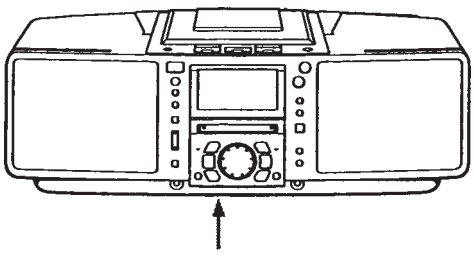

SECTION 2
GENERAL

LOCATION AND FUNCTION OF CONTROLS

FRONT PANEL: MD/CD/RADIO Section

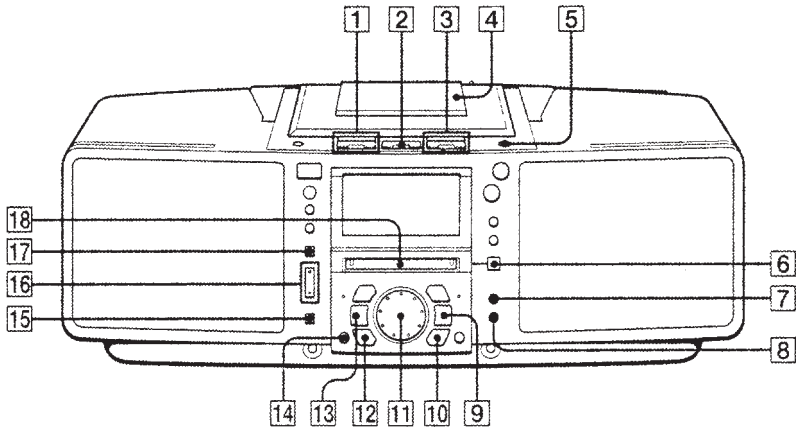

1 MD operation buttons
▷II (play/pause)
□ (stop)
2 BAND button
3 CD operation buttons
▷II (play/pause)
□ (stop)
4 CD lid
5 ⏏ CD OPEN/CLOSE button
6 ⏏ MD EJECT button
7 MONO/ST, REPEAT button
8 AUTO PRESET/RDS/SHUF/PGM button
9 TUNE +, ⇨, ▶▶ button
10 YES, ENTER button
11 Jog dial
I◀◀/▶▶I AMS
PRESET
12 NO, CANCEL button
13 TUNE –, ⇦, ◀◀ button
14 EDIT button
15 REC button
16 REC IT button
TO TOP, TO END
17 SYNCHRO REC
CD ▶ MD button
18 MD insert section

FRONT PANEL: TIMER, COM Section

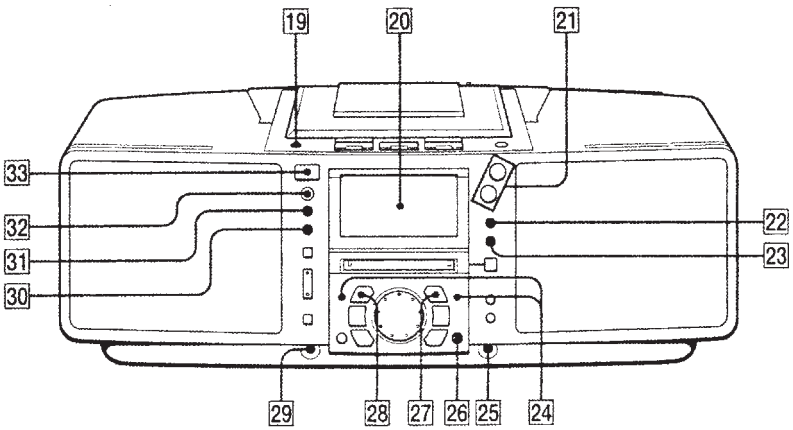

19 LINE/LINE LEVEL button
20 Display window
21 VOLUME +, – buttons
22 BASS/TREBLE button
23 MEGA BASS button
24 Jog dial Function indicator
AMS/PRESET SELECT
25 LINE IN terminal
26 DISPLAY button
27 INSERT/TIMER button
28 DELETE/CLOCK button
29 ∩ (Headphones) Jack (stereo mini jack)
30 STANDBY button
31 SLEEP button
32 Remote control receiver section
33 OPERATE button

REAR PANEL Section

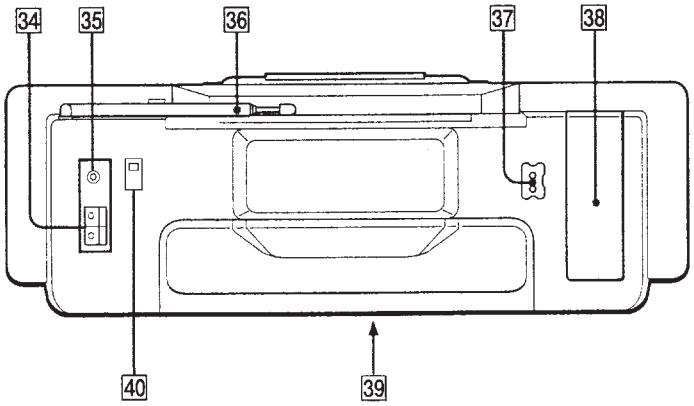

34 MW/LW ANTENNA terminal
35 FM EXT ANTENNA terminal
36 FM rod antenna
37 ~ AC IN jack
38 Battery compartment (for memory back-up)
39 RESET button (bottom)
40 FM ANTENNA SELECTOR switch

REMOTE CONTROL Section

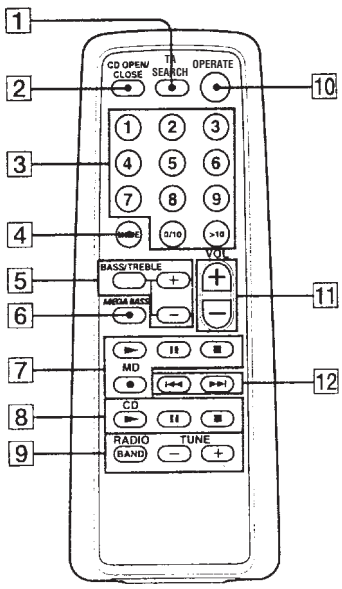

1 TA SERCH button
2 CD OPEN/CLOSE button
3 Numeric buttons
4 MODE button
5 BASS/TREBLE +, – buttons
6 MEGA BASS button
7 MD operation buttons
▶ (play)
❚❚ (pause)
■ (stop)
● (rec)
8 CD operation buttons
▶ (play)
❚❚ (pause)
■ (stop)
9 RADIO operation buttons
BAND
TUNE –, +
10 OPERATE button
11 VOL +, – buttons
12 ⏮, ⏭ AMS, select, search buttons

SECTION 3
DISASSEMBLY

● The equipment can be removed using the following procedure.

< MAIN BLOCK SECTION >

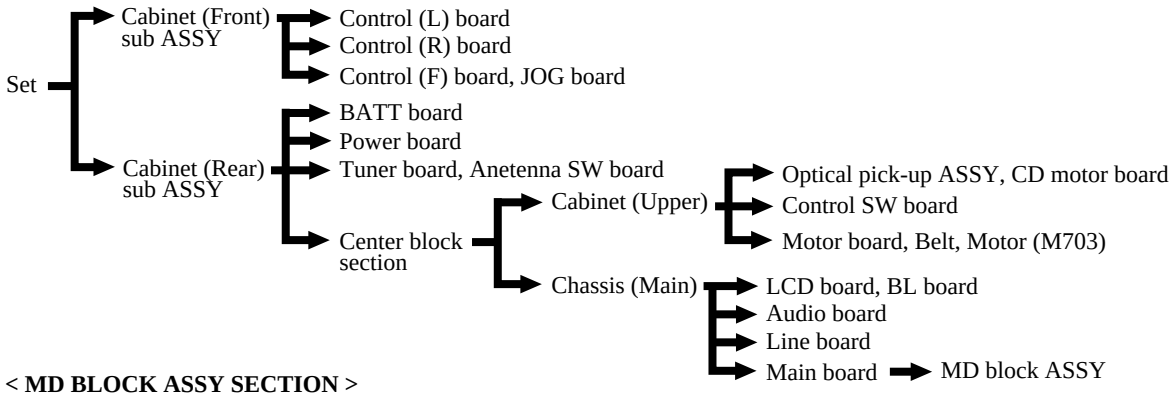

< MD BLOCK ASSY SECTION >

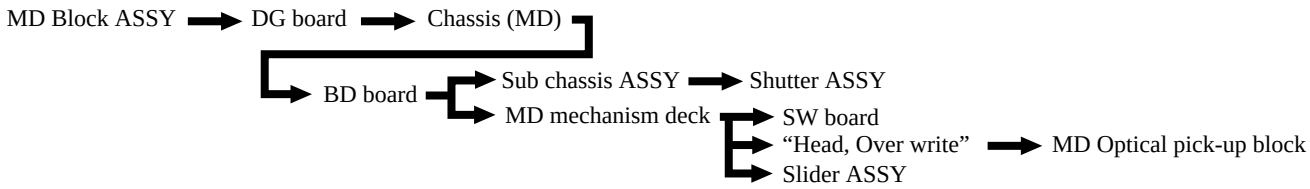

Note : Follow the disassembly procedure in the numerical order given.

<MAIN BLOCK SECTION>

3-1. CABINET (FRONT) SUB ASSY, CABINET (REAR) SUB ASSY

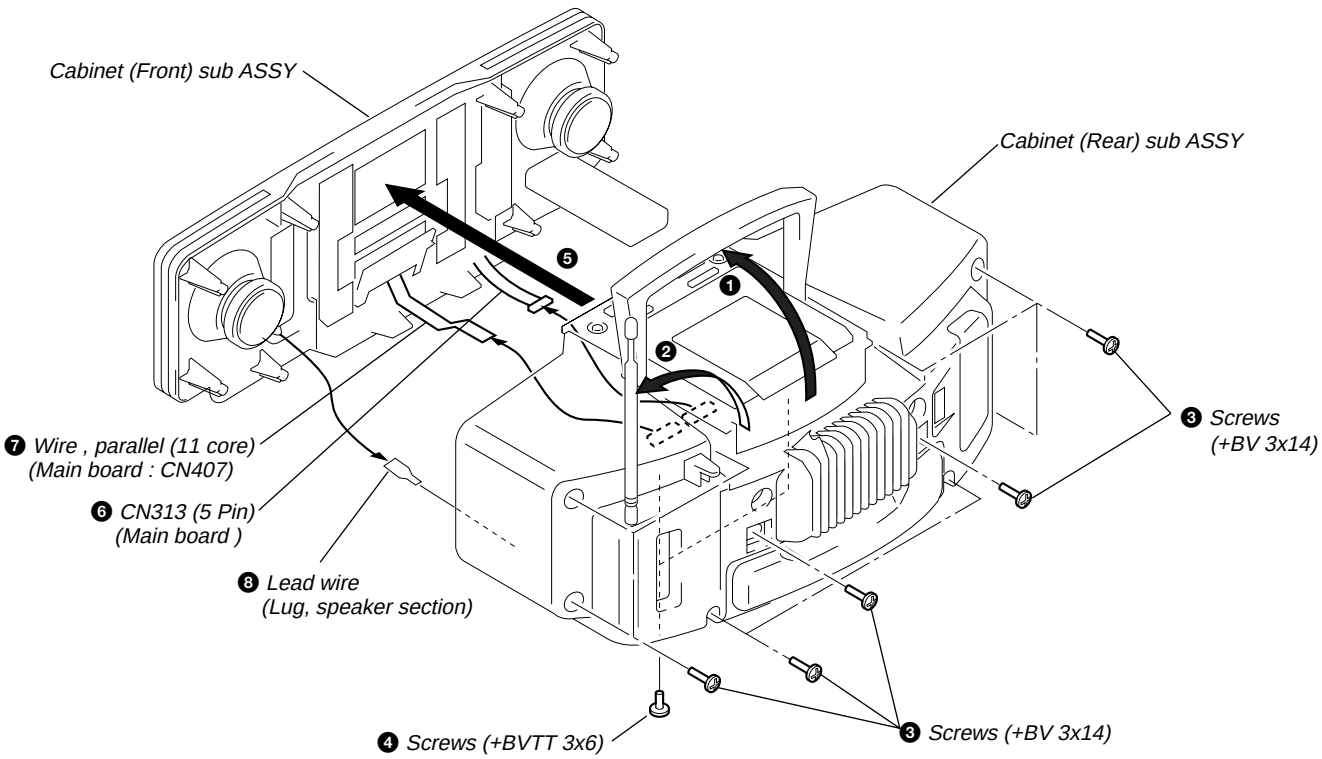
Cabinet (Front) sub ASSY
Cabinet (Rear) sub ASSY
❺
❶
❷
❸ Screws (+BV 3x14)
❼ Wire , parallel (11 core) (Main board : CN407)
❻ CN313 (5 Pin) (Main board)
❽ Lead wire (Lug, speaker section)
❹ Screws (+BVTT 3x6)
❸ Screws (+BV 3x14)

3-2. CONTROL (L) BOARD

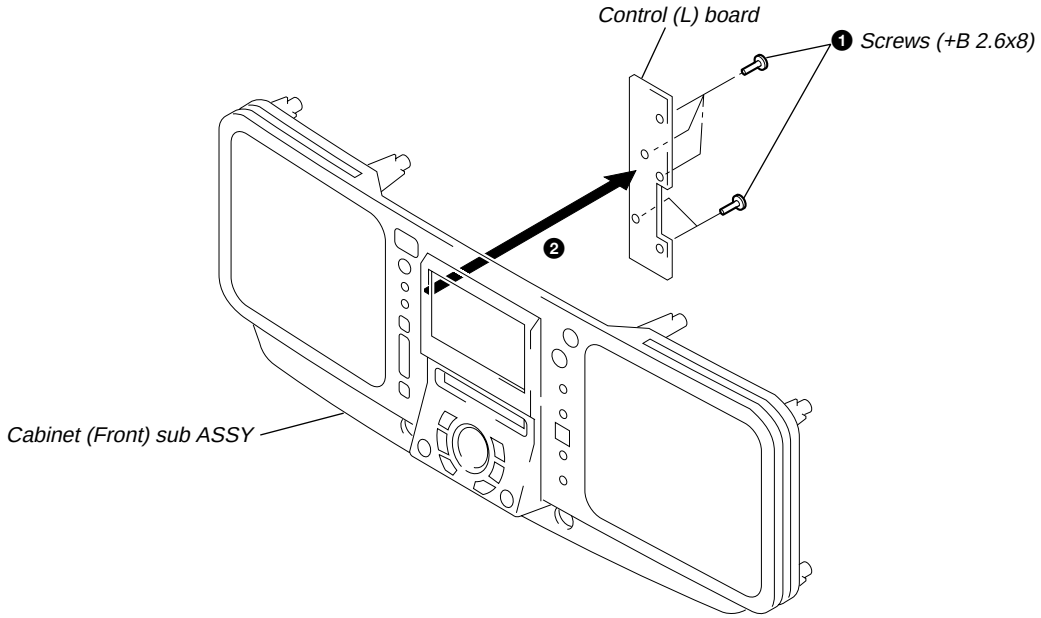

3-3. CONTROL (R) BOARD

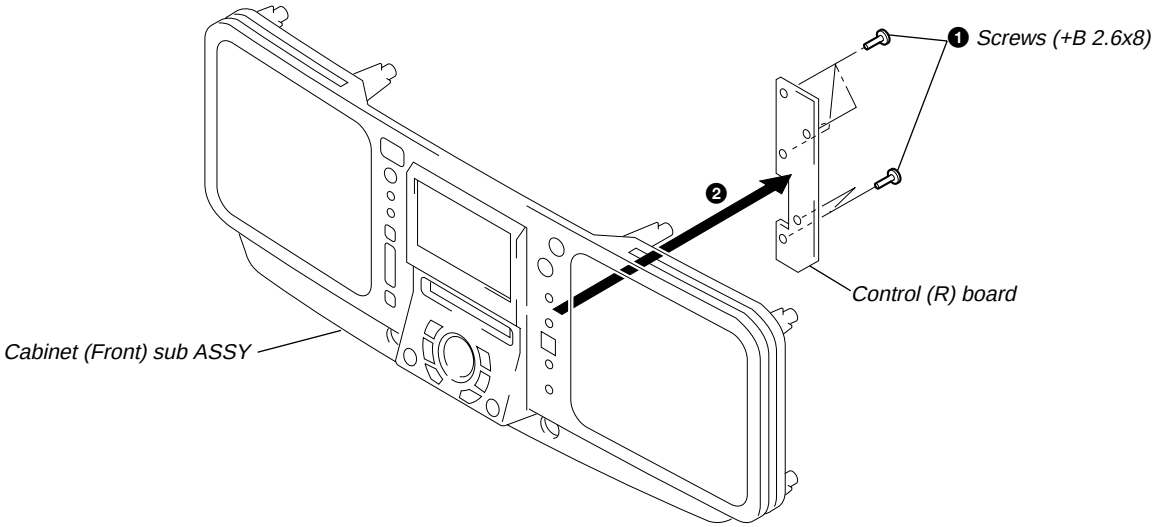

3-4. CONTROL (F) BOARD, JOG BOARD

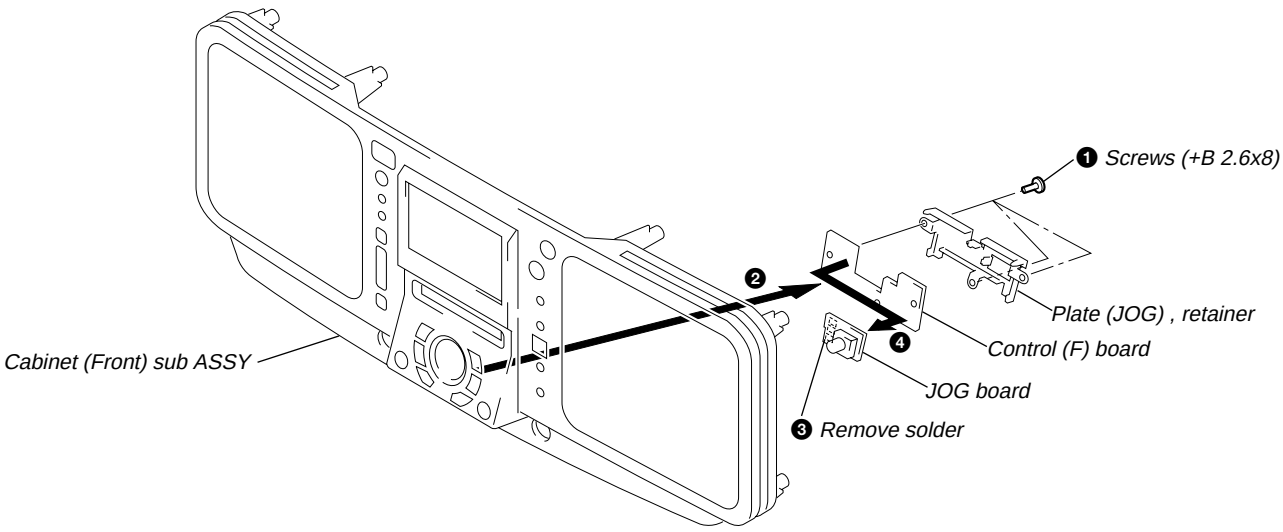

3-5. BATT BOARD

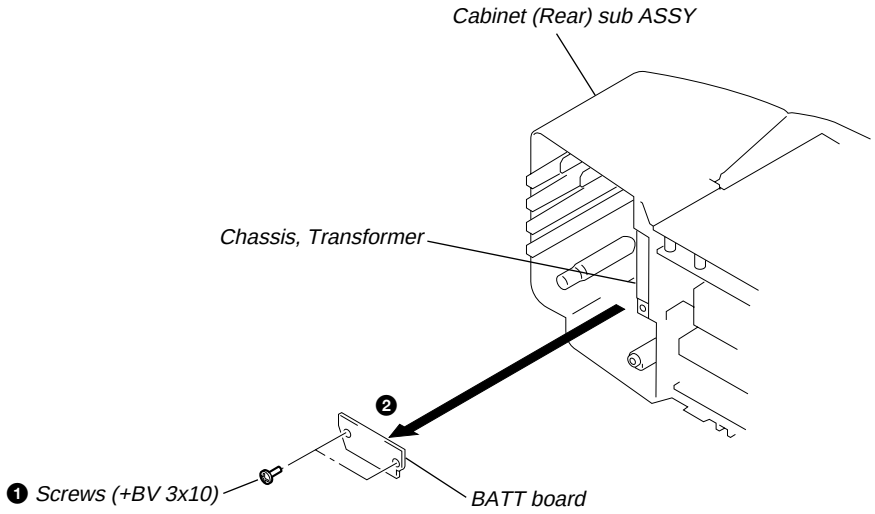

3-6. POWER BOARD

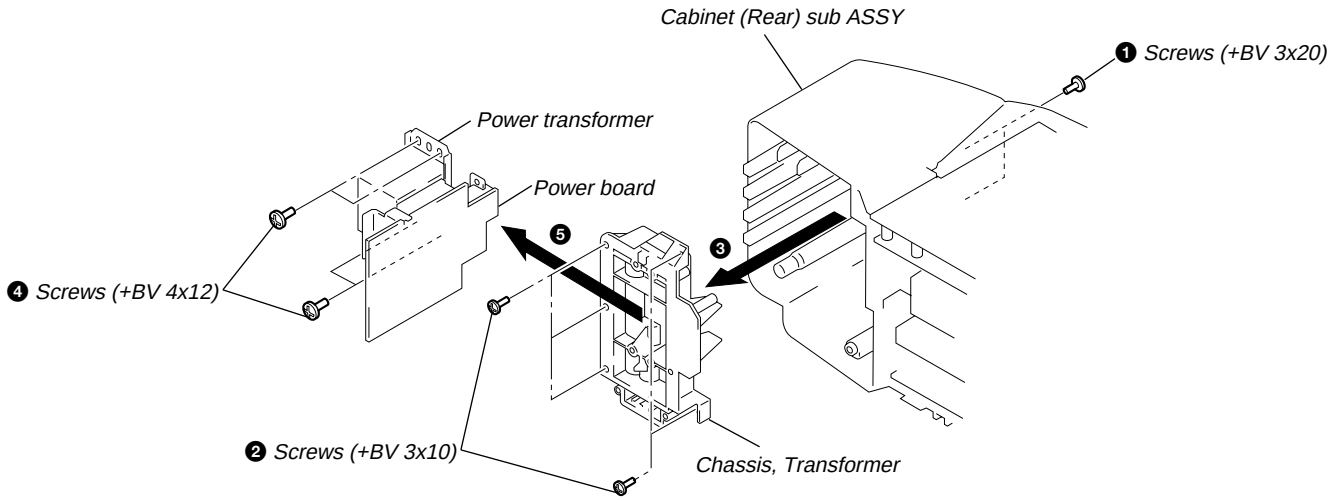

3-7. TUNER BOARD, ANTENNA SW BOARD

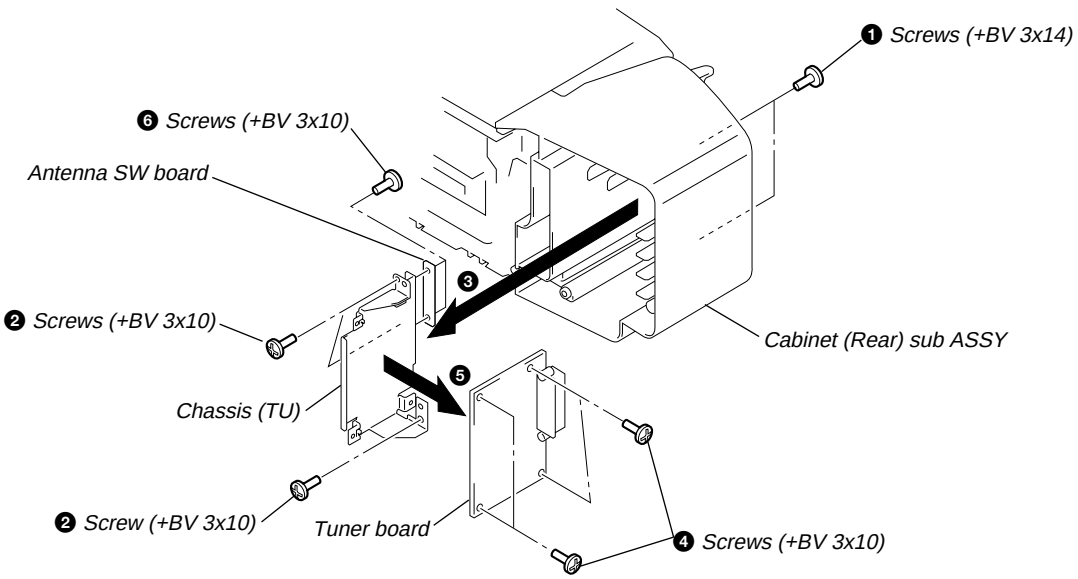

3-8. CENTER BLOCK SECTION

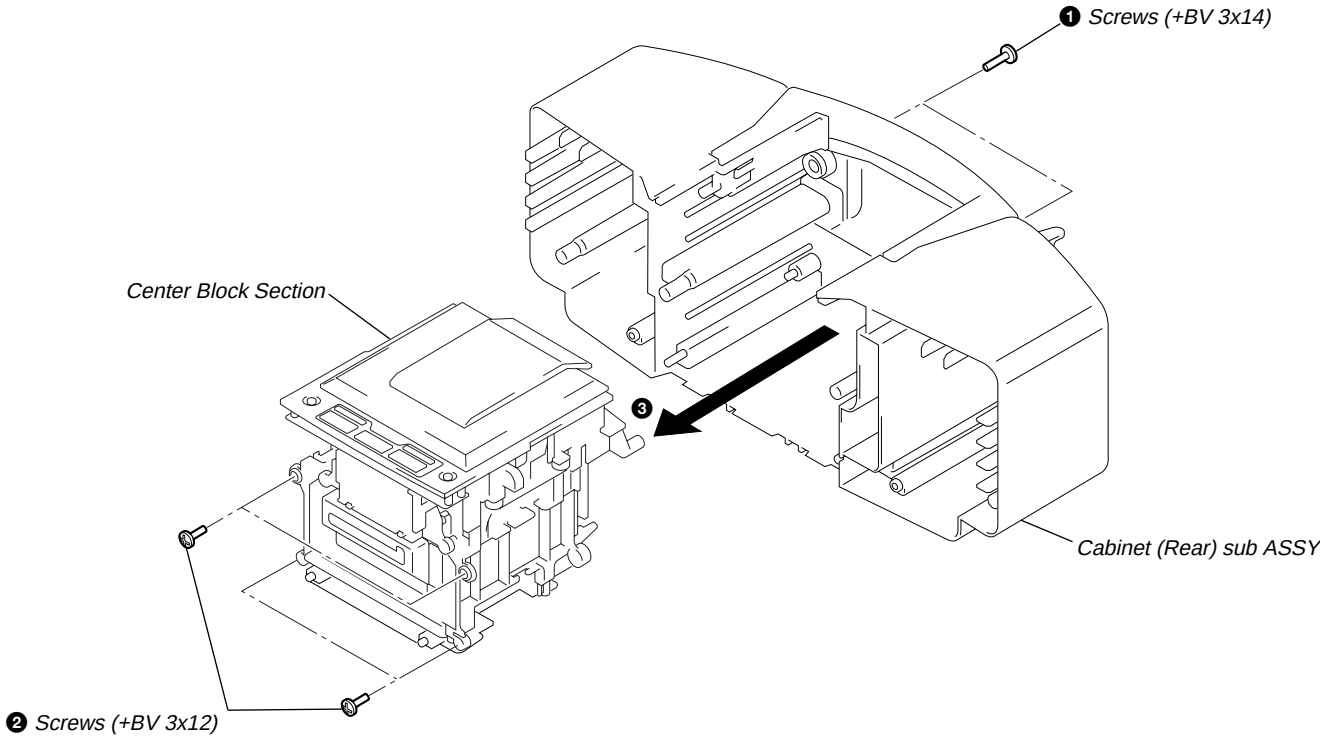

3-9. CABINET (UPPER), CHASSIS (MAIN)

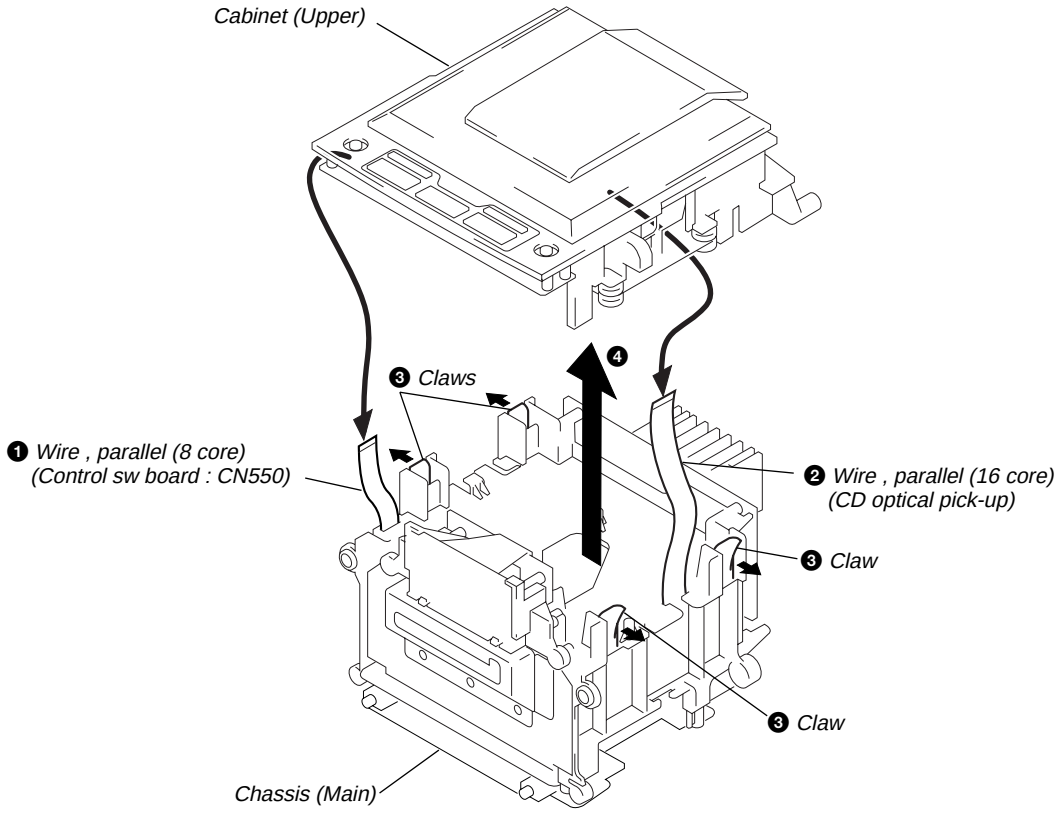

3-10. OPTICAL PICK-UP ASSY, CD MOTOR BOARD

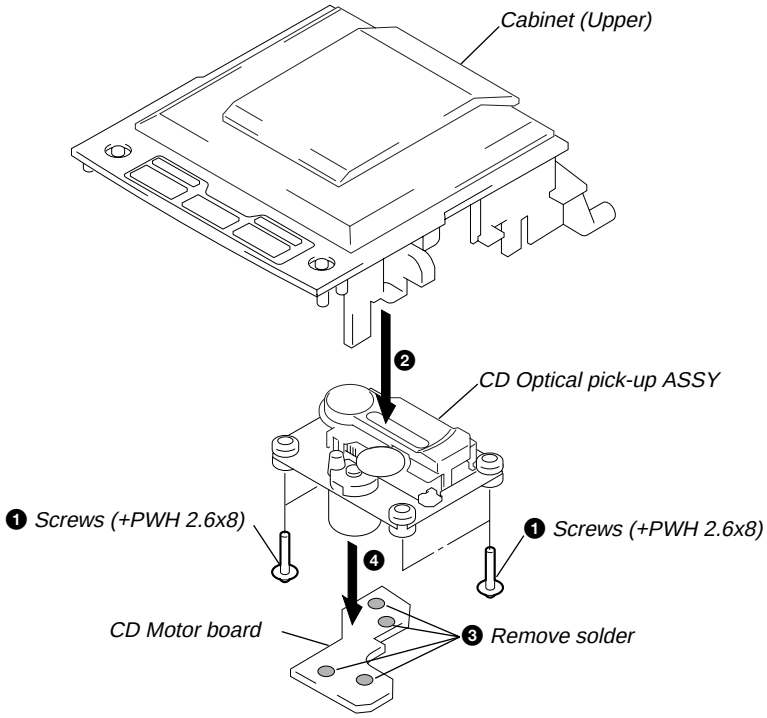

3-11. CONTROL SW BOARD

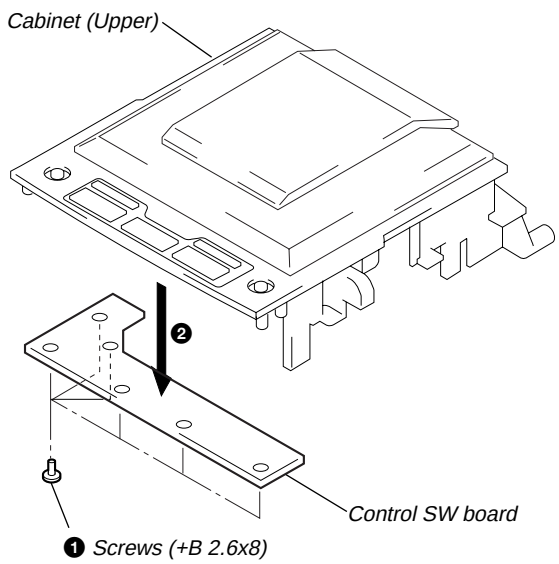

3-12. MOTOR BOARD, BELT, MOTOR (M703)

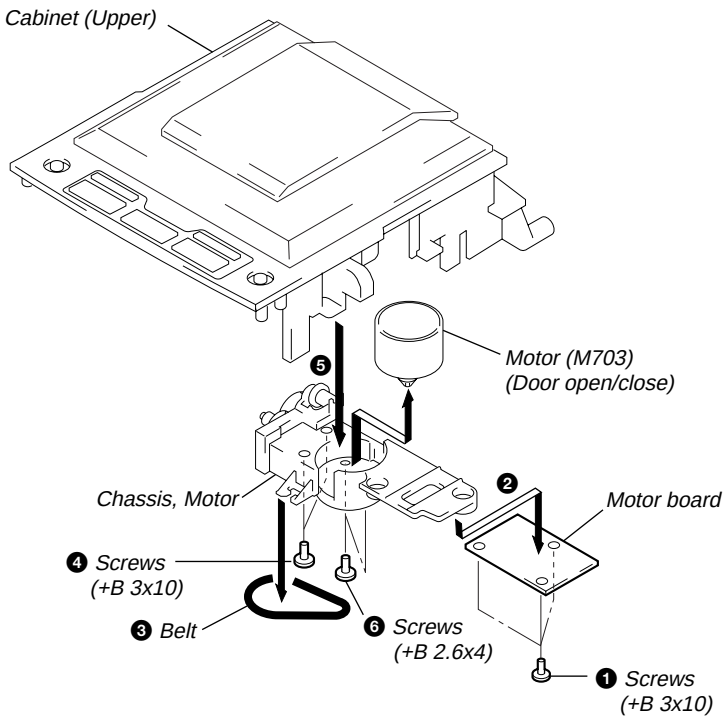

3-13. LCD BOARD, BL BOARD

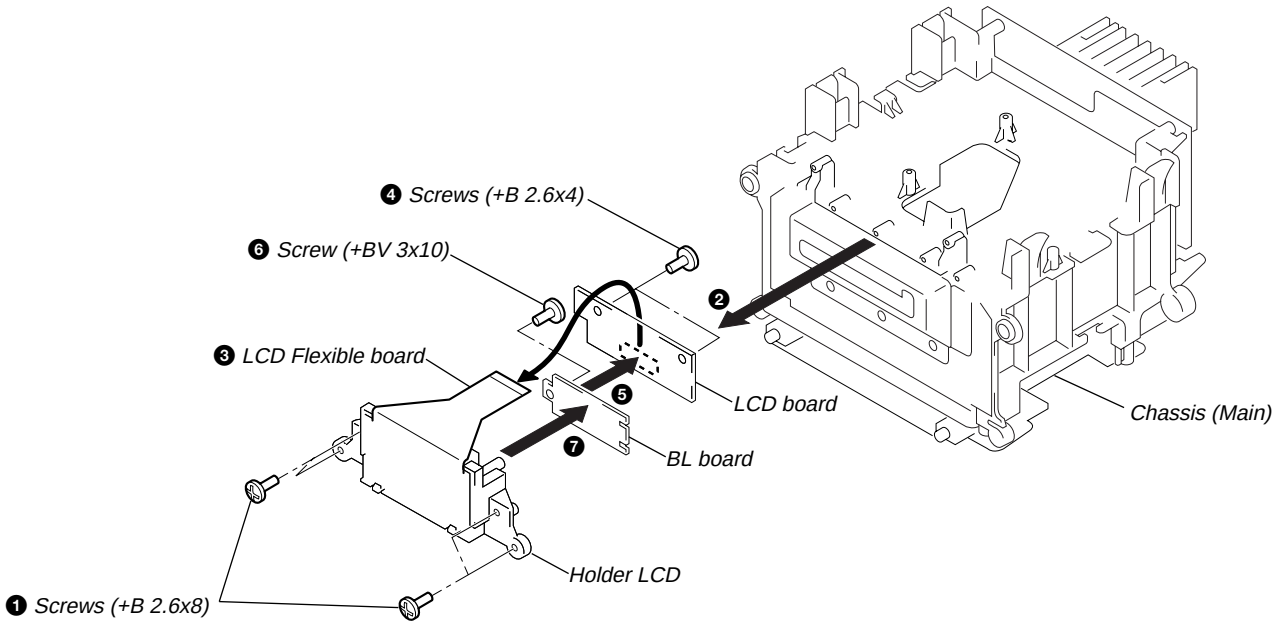

3-14. AUDIO BOARD

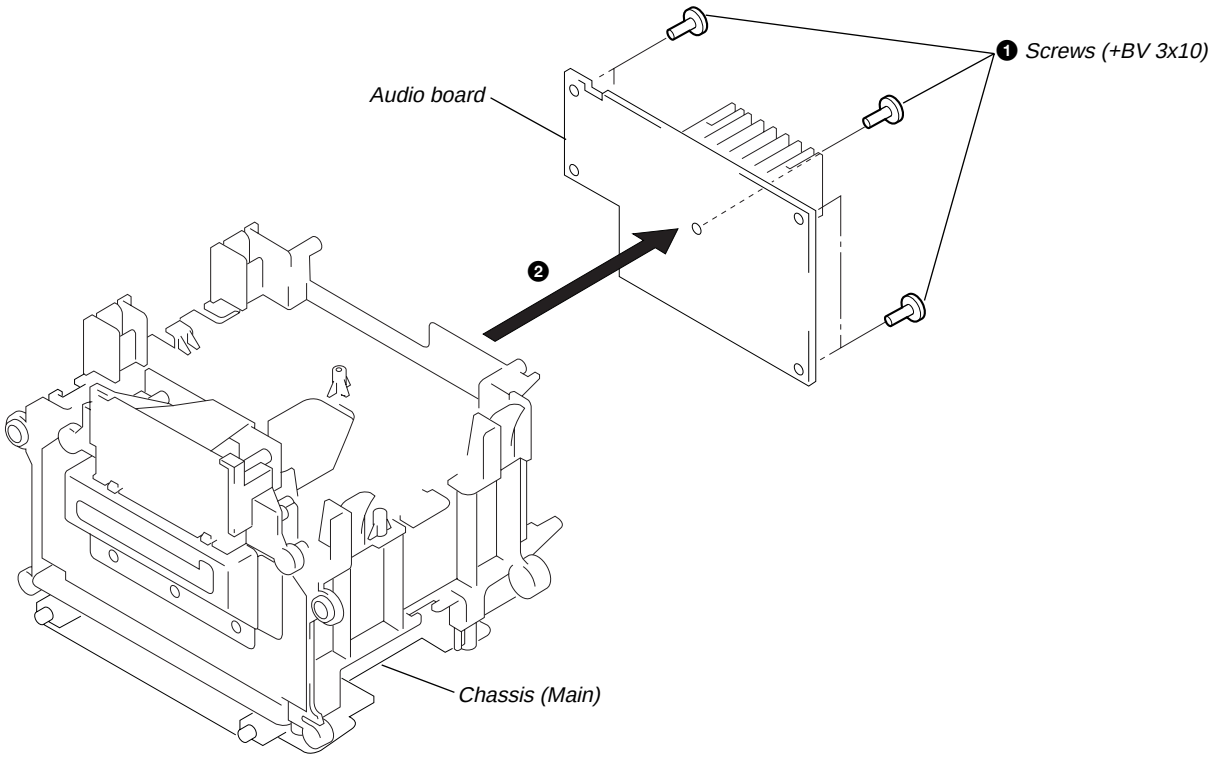

3-15. LINE BOARD

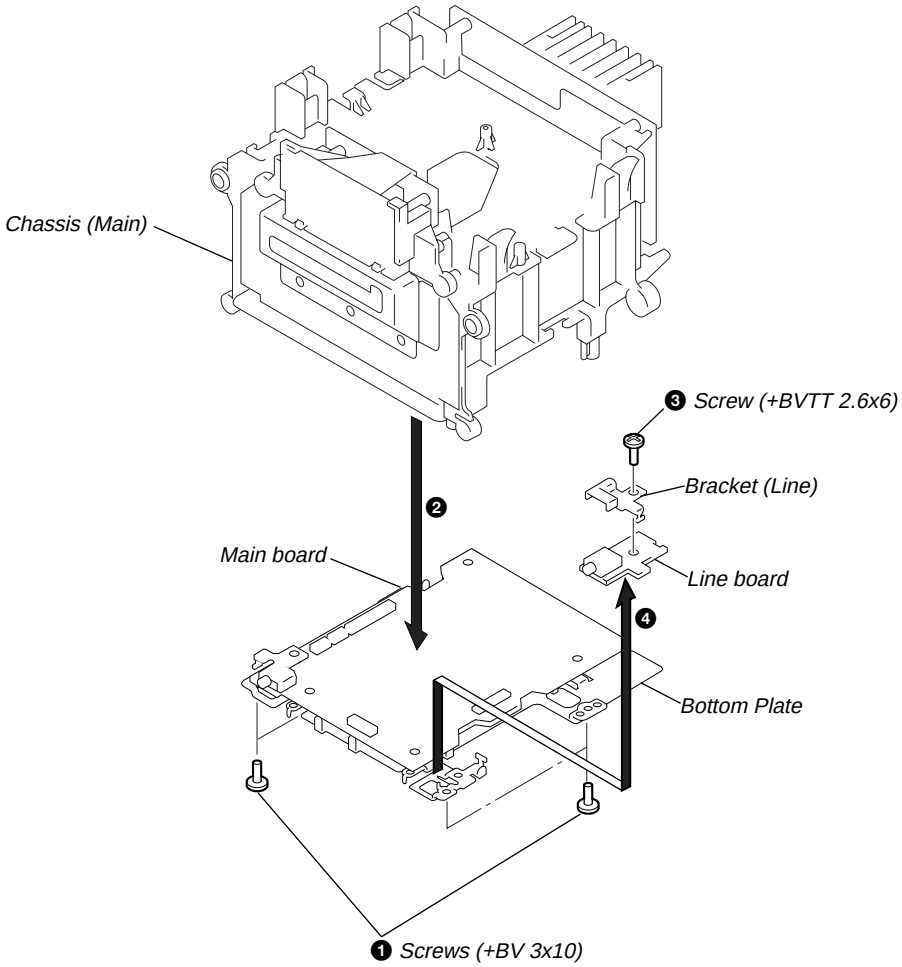

3-16. MAIN BOARD

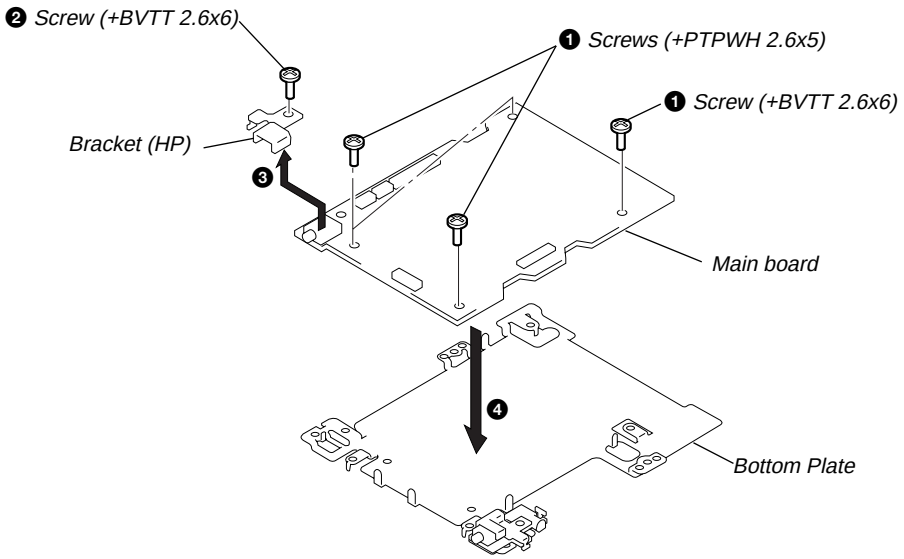

3-17. MD BLOCK ASSY

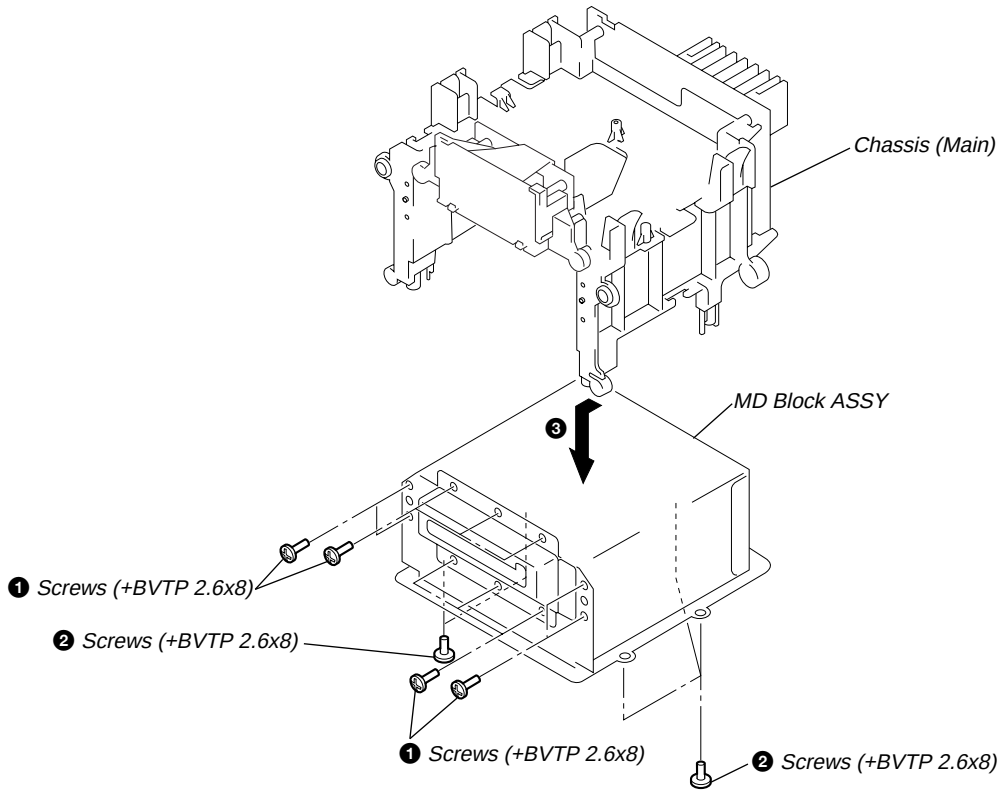

<MD BLOCK ASSY SECTION>

3-18. DG BOARD

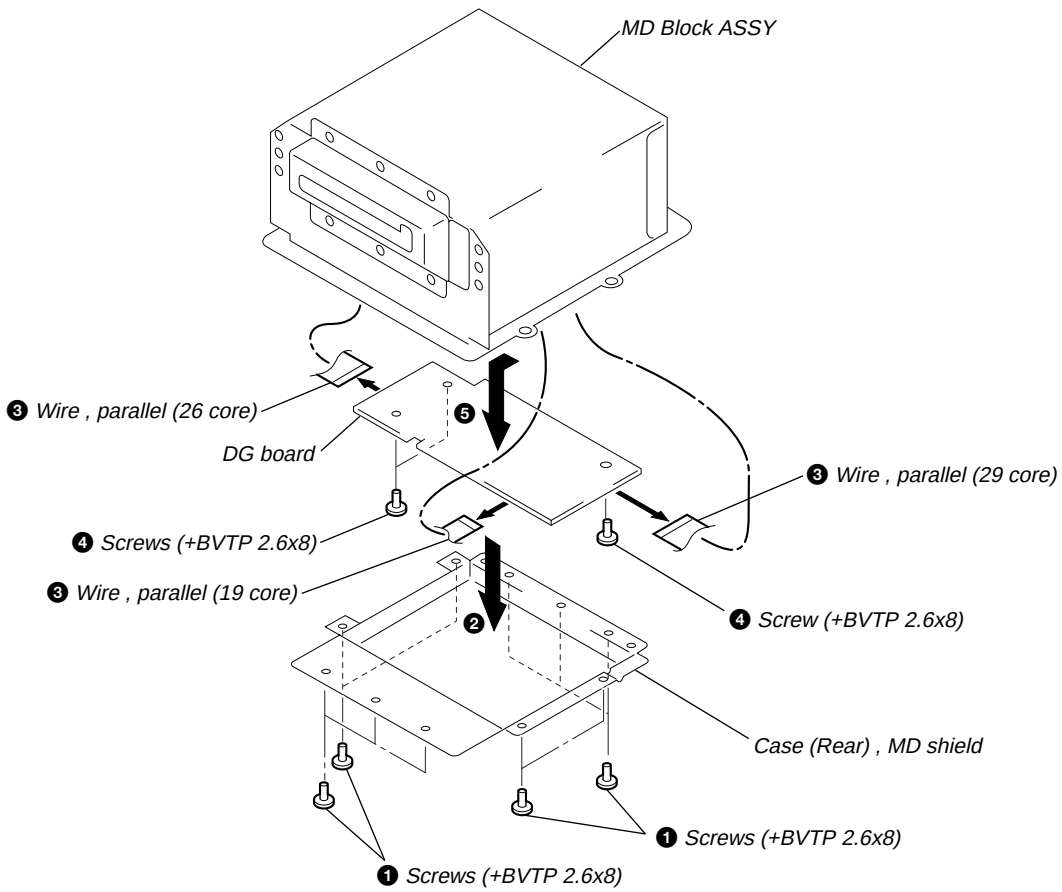

3-19. CHASSIS (MD)

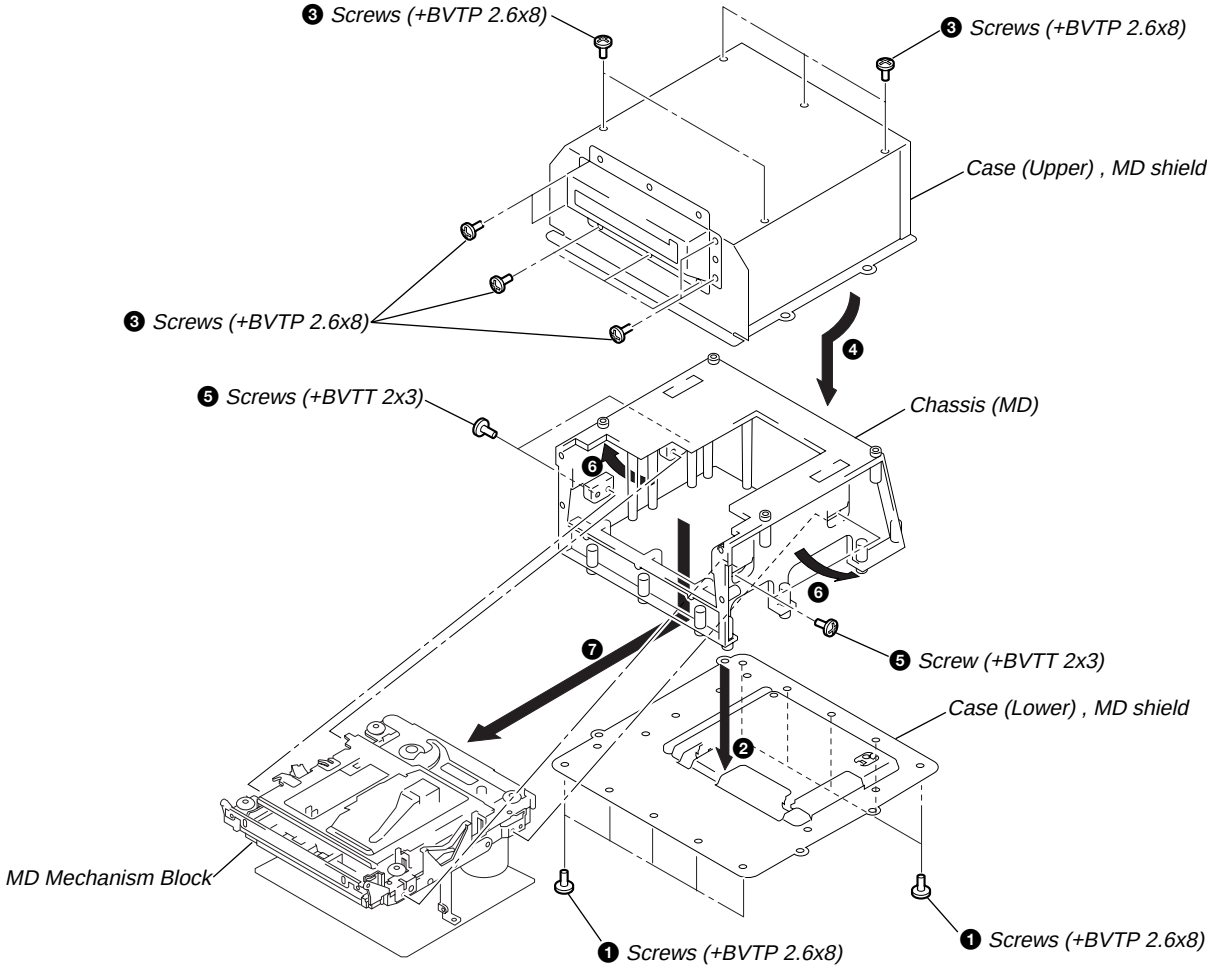

3-20. BD BOARD

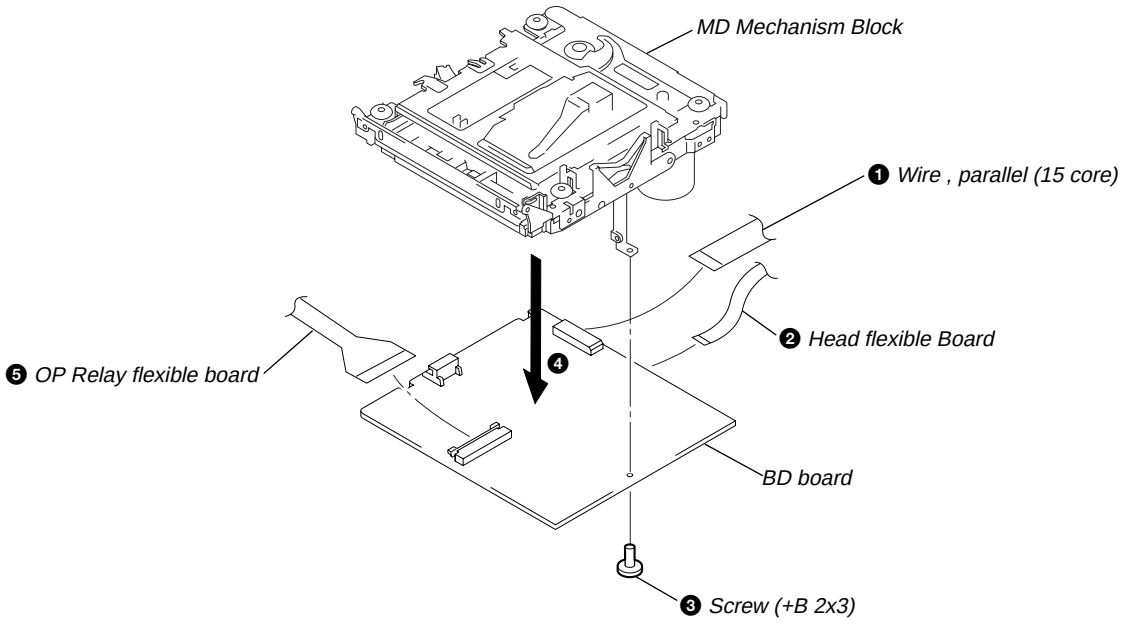

3-21. SUB CHASSIS ASSY, MD MECHANISM DECK

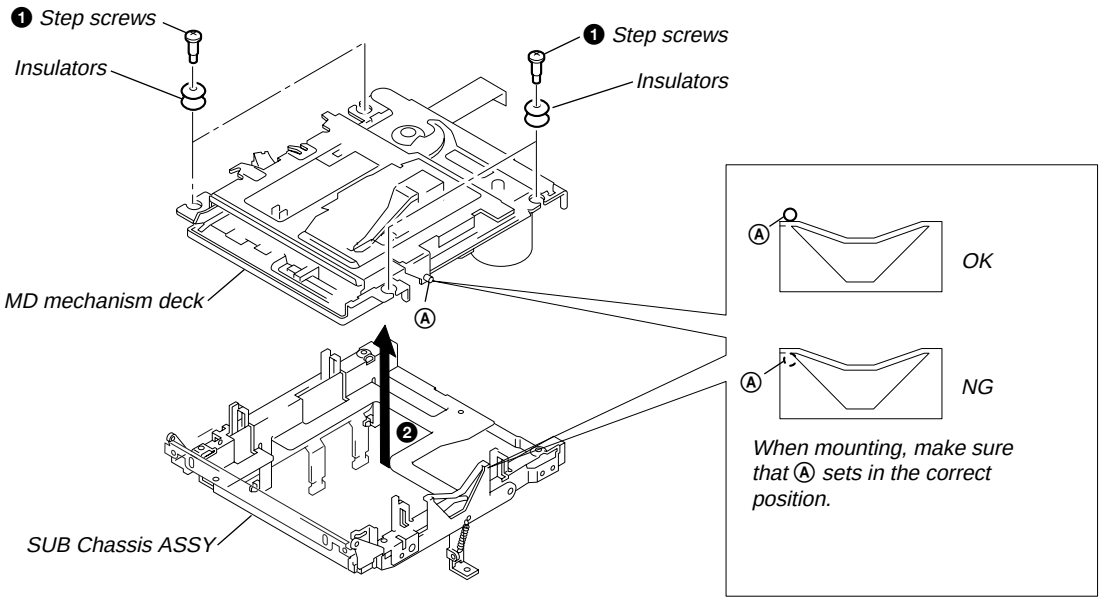

3-22. SHUTTER ASSY

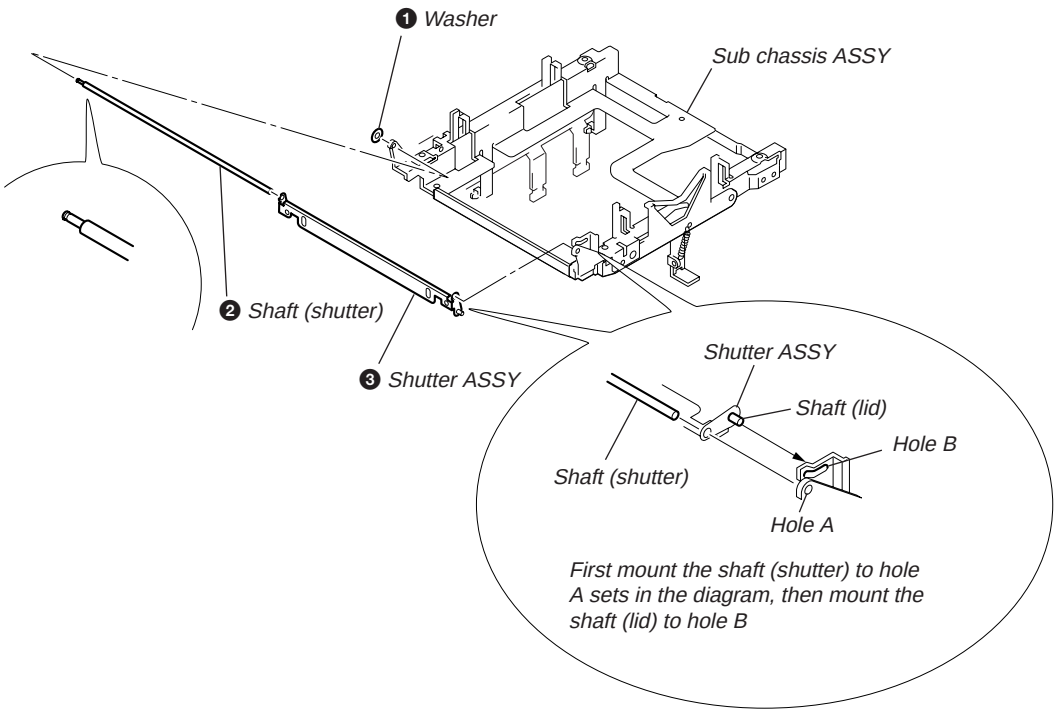
❶ Washer
Sub chassis ASSY
❷ Shaft (shutter)
❸ Shutter ASSY
Shutter ASSY
Shaft (lid)
Hole B
Shaft (shutter)
Hole A
First mount the shaft (shutter) to hole A sets in the diagram, then mount the shaft (lid) to hole B

3-23. SW BOARD

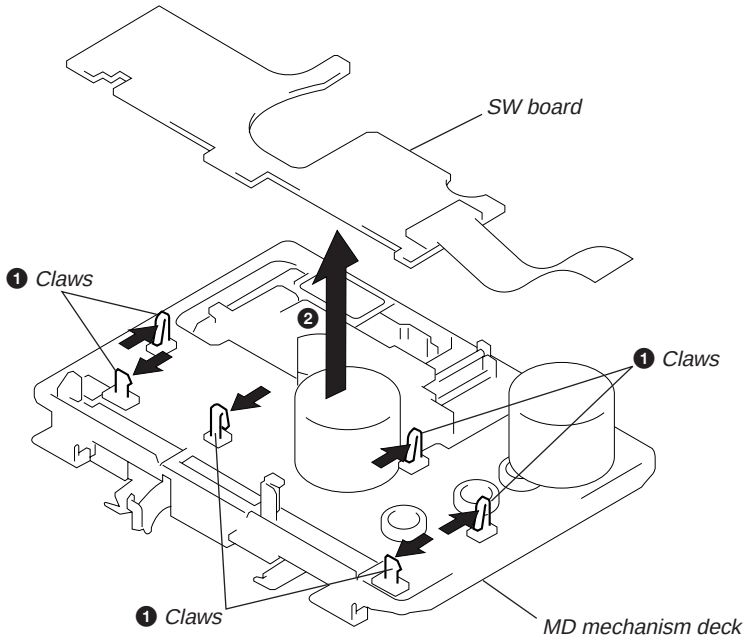

3-24. " HEAD, OVER WRITE ", SLIDER ASSY

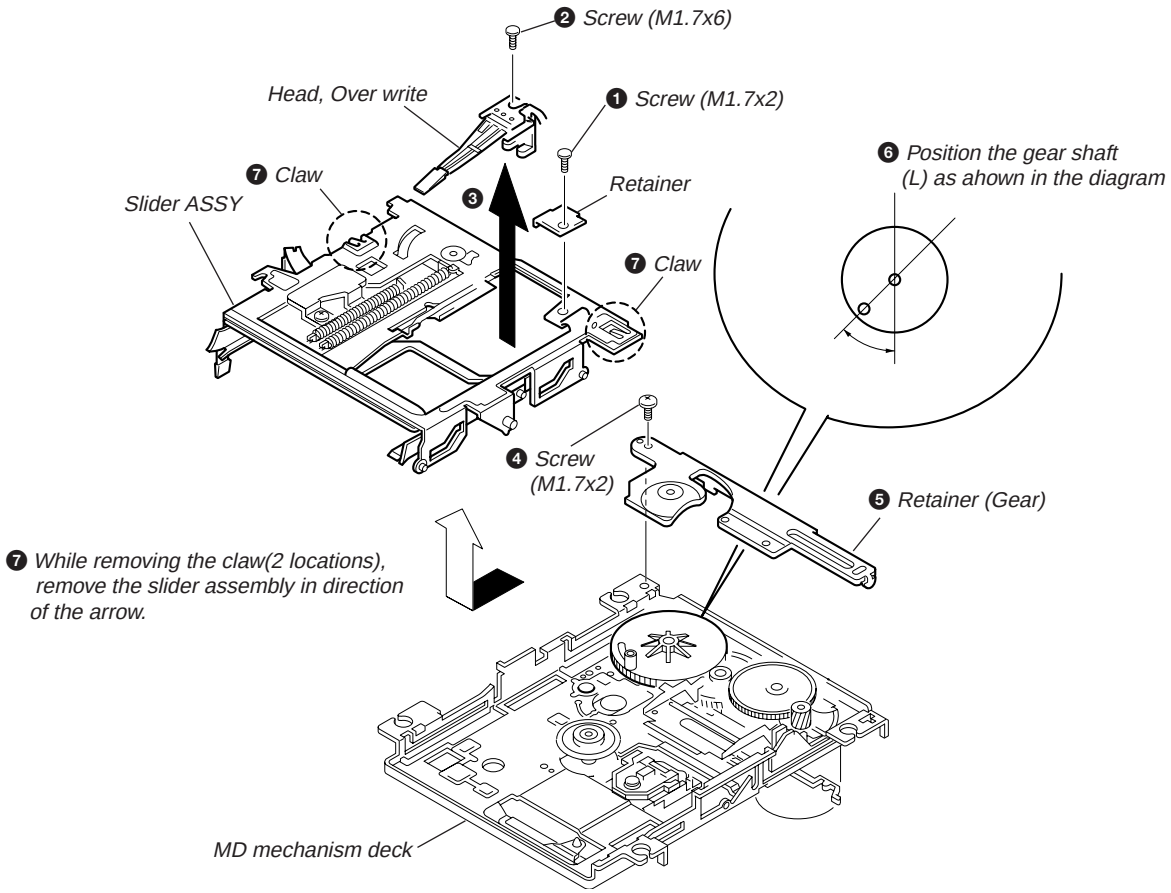
❷ Screw (M1.7x6)
Head, Over write
❶ Screw (M1.7x2)
❻ Position the gear shaft (L) as ahown in the diagram
❼ Claw
Slider ASSY
❸
Retainer
❼ Claw
❹ Screw (M1.7x2)
❺ Retainer (Gear)
❼ While removing the claw(2 locations), remove the slider assembly in direction of the arrow.
MD mechanism deck

● **CAUTION DURING SLIDER ASSY ASSEMBLY**

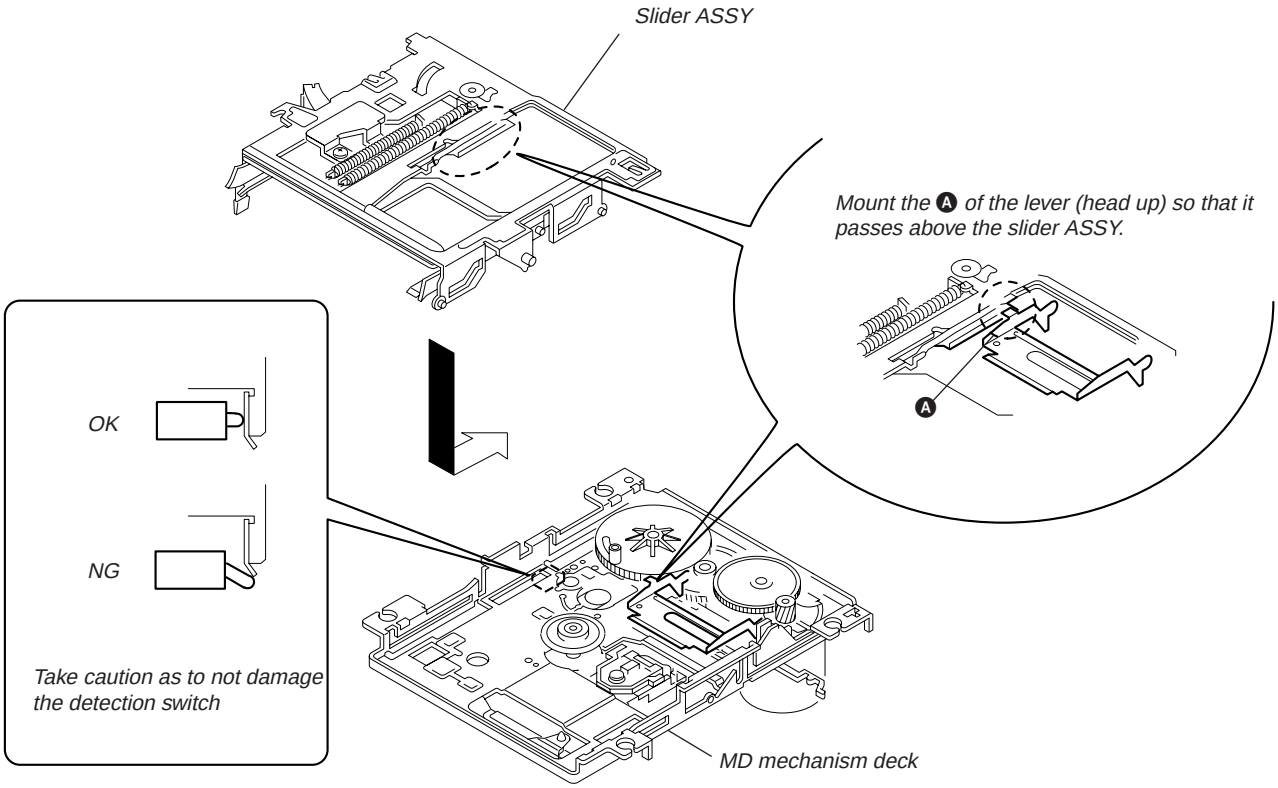
Slider ASSY
Mount the Ⓐ of the lever (head up) so that it passes above the slider ASSY.
Ⓐ
OK
NG
Take caution as to not damage the detection switch
MD mechanism deck

3-25. MD OPTICAL PICK-UP BLOCK

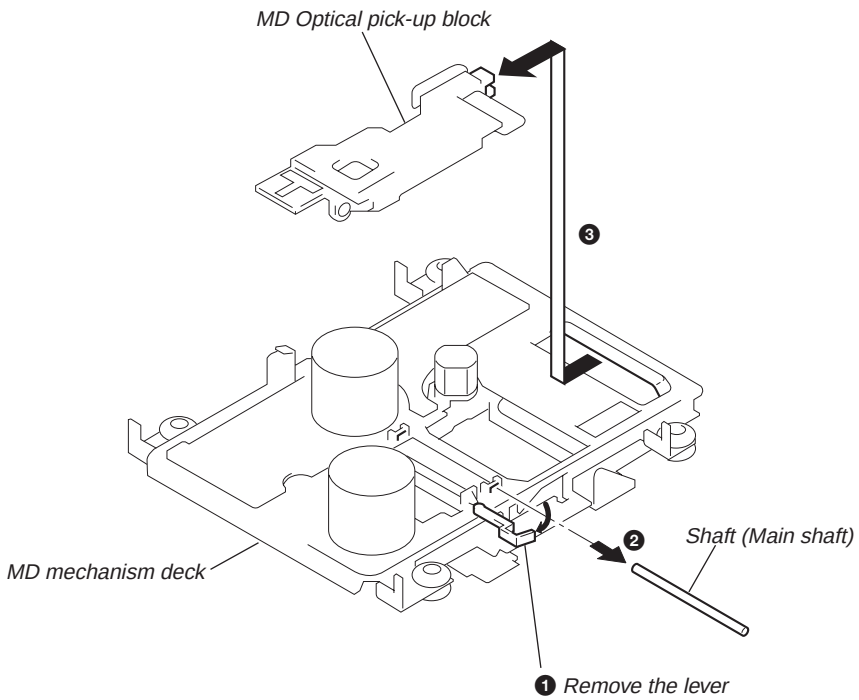

SECTION 4
TEST MODE

4-1. CAUTIONS WHEN USING THE TEST MODE

① Check to make sure the inserted disk is completed stopped before removing since loading related operations will operate regardless of the Test mode operation.
The rotation of the inserted disk will not stop even when pressing the MD EJECT button during continuous playback and continuous recording.
In this case, the disk will be ejected while still in motion.
Always press the NO/CANSEL button and check to see that the disk has stopped turning before pressing the MD EJECT button.

② In the Test mode, detection of the write-protect tab is not executed. For this reason, pressing the REC button in modes where the recording laser is emitted (see 4-1-1) will delete the recorded contents regardless of the tab position. When using a disk in the Test mode which its contents must not be deleted, avoid entering the Continuous Recording mode and Traverse Adjustment mode.

4-1-1. Modes which the record laser is emitted and button operations

- Continuous Recording mode (CREC MODE)
- Traverse Adjustment mode (EFBAL ADJUST)
- Laser Power Adjustment mode (LDPWR ADJUST)
- Laser Power Check mode (LDPWR CHECK)
- Traverse (MO) check (EF MO CHECK)
- Traverse (MO) adjustment (EF MO ADJUST)
- When pressing the REC button

4-2. TEST MODE SETTINGS

MD Test mode :
Press and hold the EDIT button and BASS/TREBLE button, then press MD ▶II → MD ■ → MD ▶II → MD ■.

CD Test mode :
Press and hold the EDIT button and BASS/TREBLE button, then press CD ▶II → CD ■ → CD ▶II → CD ■.

Display Test mode :
Press and hold the EDIT button and BASS/TREBLE button, then press BAND → LINE → BAND → LINE (FUNCTION is LINE).

Note 1 : Each test mode can be entered regardless of whether the power is on or off. However, it is not possible to enter the test mode of the particular function being operated. For example, it its not possible to enter the CD Test mode when the CD is in function.

4-3. RELEASING THE TEST MODE

Press the RESET button located on the bottom.

4-4. BASIC OPERATIONS OF THE TEST MODE

All operations are made using the AMS dial, YES/ENTER button and NO/CANSEL button.
The functions of each button are as follows:

Function Name	Functions
AMS dial	Used to change parameters and modes
YES/ENTER button	Used to advance and confirm
NO/CANSEL button	Used to return and cancel

4-5. SELECTING THE TEST MODE

There are 9 types of test modes (see table below). Turning the AMS dial clockwise switches modes shown in the table in the order from top to bottom. Turning the AMS dial counterclockwise switches modes shown in the table in the reverse order.

Display	Description
TEMP ADJUST	Temperature compensation offset adjustment
LDPWR ADJUST	Laser power adjustment
LDPWR CHECK	Laser power check
EF BAL ADJUST	Traverse adjustment
FBIAS ADJUST	Focus bias adjustment
FBIAS CHECK	Focus bias check
CPLAY MODE	Continuous playback mode
CREC MODE	Continuous recording mode
EEP MODE	Non-volatile storage memory control

- For details on each adjustment mode, see respective items of SECTION 5. ADJUSTMENT
- If you have accidently entered another mode, press the NO/CANSEL button to exit.
- The EEP MODE is not used during servicing. Thus, details on this mode are not given. If this mode is accidently entered, exit immediately by pressing the NO/CANSEL button as the unit may not operate correctly if the non-volatile storage memory being overwritten.

4-5-1. Operating in the Continuous Playback mode

1. Entering the Continuous Playback mode
   ① Insert a disk into the unit (either recordable or playback disk)
   ② Turn the AMS dial until “CPLAY MODE” is displayed.
   ③ Press the YES/ENTER button. The display will change to “CPLAY IN”.
   ④ When accessing is completed, the display will change to “C1= AD = ”.

   Note : The numbers of “ ” displayed indicate the error rate and “ADER”.

2. Changing the playback location
   ① Pressing the YES/ENTER button during continuous playback will change the display in the following manner, enabling change in the playback location.
   “CPLAY MID” → “CPLAY OUT” → “CPLAY IN” → “CPLAY MID”
   ② When accessing is completed, the display will change to “C1= AD = ”.

   Note : The numbers of “ ” displayed indicate the error rate and “ADER”.

3. Exiting the Continuous Playback mode
   ① Press the NO/CANSEL button. The display will change to “CPLAY MODE”.
   ② To remove the disk, press the MD EJECT button.

   Note : The playback initiate addresses of IN, MID and OUT are indicated below. To display the playback position, press the DISPLAY button and “CPLAY( )”.

IN	40h cluster
MID	300h cluster
OUT	700h cluster

4-5-2. Operating in the Continuous Recording mode

1. Entering the Continuous Recording mode
   ① Insert a disk that may be recorded into the unit (see Note 3)
   ② Turn the AMS dial until “CREC MODE” is displayed.
   ③ Press the YES/ENTER button. The display will change to “CREC MID”.
   ④ When accessing is completed, the display will change to “CREC (□□□□□)”.
   Note : The numbers of “ □ ” displayed indicate the record position address.
2. Changing the recording location
   ① Pressing the YES button during continuous recording will change the display in the following manner, enabling change in the recording location. During location change, the REC indicator will be off.
   “CPLAY MID” → “CPLAY OUT” → “CPLAY IN” → “CPLAY MID”
   ② When accessing is completed, the display will change to “CREC (□□□□□)” and the REC indicator will light.
   Note : The numbers of “ □ ” displayed indicate the record position address.
3. Exiting the Continuous Recording mode
   ① Press the NO/CANSEL button. The display will change to “CREC MODE” and the REC indicator will turn off.
   ② To remove the disk, press the MD EJECT button.
   Note 1 : The record initiate addresses of IN, MID and OUT are indicated below. To display the record position, press the DISPLAY button and “CREC (□□□□□)” .
   IN 40h cluster
   MID 300h cluster
   OUT 700h cluster
   Note 2 : The NO/CANSEL button can be used at anytime to stop recording.
   Note 3 : Detection for the write-protect tab is not executed when in the test mode. Do not enter the Continuous Recording mode with a disk you do not wish to have deleted.
   Note 4 : Do not continuously record for more than 5 minutes.
   Note 5 : Make sure no vibration is applied to the unit during continuous recording.

4-5-3. Non-volatile storage memory mode (EEP mode)

This is the mode to read and write the contents of the non-volatile storage memory.
This mode is not used for servicing.
If you accidently enter this mode, exit immediately by pressing the NO/CANSEL button.

4-6. FUNCTIONS OF OTHER BUTTONS

Function Name	Main Description
EDIT + ►II	Continuous playback when pressed during disk is stopped. Tracking servo ON/OFF when pressed during continuous playback
EDIT + ■	Stopping of continuous recording/playback
►►	The thread moves outward while the button is pressed
◄◄	The thread moves inward while the button is pressed
EDIT + REC	Record ON/OFF during continuous playback
EDIT + SYNCHRO REC	Switched between pit and groove every time the button is pressed
EDIT + SHUF/PGM	Spindle servo mode switch (CLV S ← → CLV A)
DISPLAY	Display contents are switched every time the button is pressed
MD EJECT	Eject disk
RESET	Exit the test mode

4-7. TEST MODE DISPLAY

The display will switch in the following sequence every time the DISPLAY button is pressed.

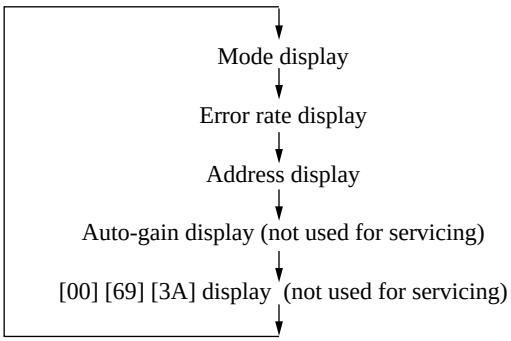
Mode display
Error rate display
Address display
Auto-gain display (not used for servicing)
[00] [69] [3A] display (not used for servicing)

1. Mode display
Displays such information as “TEMP ADJUST” and “CPLAY MODE”.
2. Error rate display
The error rate is displayed using the following format.
C1=C1ER AD=ADER
3. Address display
The address is displayed using the following format (MO : recordable disk, CD : playback disk)
Switched between pit and groove every time the EDIT and SYNCHRO REC button is pressed
h = □□□□S = □□□□(MO pit and CD)
h = □□□□a = □□□□(MO groove)
h = : header adress
S = : SUBQ adress
a = : ATIP adress
Note : “–” is displayed when servo is off.
4. Auto-gain display (not used for servicing)
The auto-gain is displayed using the following format.
AGF = @@ T = ## [&&]
@@ : focus servo gain coefficient
: tracking servo gain coefficient
&& : displays [OK], [NG] or [– –].
[– –] indicates that convergence is incomplete

Definitions of other displays

Display	Description	
	Indicator ON	Indicator OFF
SHUF	Continuous playback in operation (CLV : ON)	Disk stopped (CLV : OFF)
II	Tracking servo OFF	Tracking servo ON
REC, SHUF	Recording mode ON	Recording mode OFF
TOC EDIT	ABCD adjustment completed	
DIGITAL	Focus auto-gain OK	(Flashing) Focus OK Tracking auto-gain NG
TRACK	Pit	Groove
DISC mark	High reflection	Low reflection
DATE	CLV-S	CLV-A

SECTION 5
ADJUSTMENTS

MD SECTION

5-1. CAUTION WHEN CHECKING LASER DIODE EMISSION

Never look from directly above when checking the laser diode emission during adjustment as failure to do so may result in loss of eyesight.

5-2. CAUTIONS WHEN HANDLING THE OPTICAL PICK-UP (KMS-260A)

The laser diode within the optical pick-up is extremely vulnerable to static electricity. When handling, bridge the laser tap of the flexible board on the optical pick-up with solder.
When removing the connector, first bridge the laser tap with solder. Furthermore, do not remove the soldered bridge before reconnecting. In addition, take sufficient measures when working to prevent electrostatic damage. Take caution when handling the flexible board since it is easily torn.

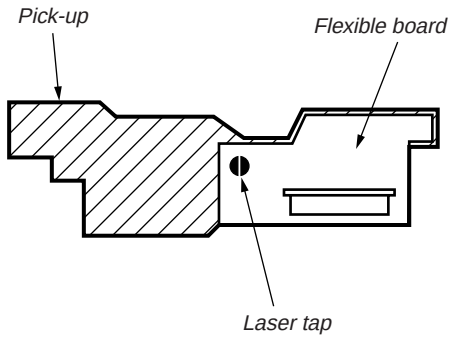

5-3. CAUTIONS DURING ADJUSTMENT

1) After replacing the following parts, make adjustments and checks for the table items where indicated with a O in the order given.

	Optical pickup	BD board		
		IC171	D101	IC101,IC121,IC192
1. Temperature compensation offset adjustment	X	O	O	O
2. Laser power adjustment	O	O	X	O
3. Traverse adjustment	O	O	X	O
4. Focus bias adjustment	O	O	X	O
5. Error rate check	O	O	X	O

2) Perform adjustments in the test mode.
Exit the test mode when completed with adjustment.
2) Perform adjustments in the order given.
3) Use the following jig and measuring equipment:
   - Check disk (MD) TDYS-I (Part no : 4-963-646-01)
   - Laser power meter LPM-8001 (Part no : J-2501-046-A)
   - Oscilloscope (perform measurement after calibrating the probe)
   - Digital voltmeter
   - Thermometer
   - BD board waveform checking jig (part no : J-2501-124-A)

5) When looking at multiple signals using oscilloscope, etc., make sure VC and GND are not connected within the oscilloscope. Failure to do so will short circuit VC and GND.
6) Using the special jig enables checking of the waveform without soldering (see page 4 of Service Notes).

5-4. CREATING A CONTINUOUS RECORDING DISK

- This disk is used during focus bias adjustment and error rate check. The procedure for creating a continuous recording disk is as follows.

1. Insert a disk (any commercially available blank disk).
2. Turn the AMS dial until “CREC MODE” is displayed.
3. Press the YES/ENTER button to display “CREC MID”. “CREC(0300)” will be displayed for an instant and recording will begin.
4. Complete recording within 5 minutes.
5. Press the NO/CANCEL button to stop recording.
6. Press the MD EJECT button to remove the disk.

A continuously recorded disk can be created by following the procedure above for focus bias adjustment and error rate check.

Note: Take caution as to not apply vibration to the unit during continuous recording.

5-5. TEMPERATURE COMPENSATION OFFSET ADJUSTMENT

The temperature data at the time is saved in the non-volatile storage memory as the standard data of 25°C.

Notes:

1. Do not make this adjustment under normal conditions.
2. Perform this adjustment in an environment with ambient temperature between 22 to 28°C. Furthermore, make the adjustment immediately after turning on the power when the internal temperature and ambient temperature are between 22 to 28°C.
3. After D101 replacement, perform the adjustment after the part has ample time to adjust to the ambient temperature.

Procedure:

1. Turn the AMS dial until “ TEMP ADJUST ” is displayed.
2. Press the YES/ENTER button and select the TEMP ADJUST mode.
3. “ TEMP= ▯▯ ” and the current temperature data will be displayed.
4. To save the data: press the YES/ENTER button
   To not save the data: press the NO/CANCEL button
5. After pressing the YES/ENTER button, “ TEMP= ▯▯ SAVE ” will be displayed momentarily and the display will then return to “ TEMP ADJUST ”.
   The display will immediately return to “ TEMP ADJUST ” when pressing the NO/CANCEL button.

Specified values:

The value of TEMP= ▯▯ must be within the range of E0-EF, F0-FF, 00-0F, 10-1F or 20-2F.

5-6. LASER POWER ADJUSTMENT

Connections:

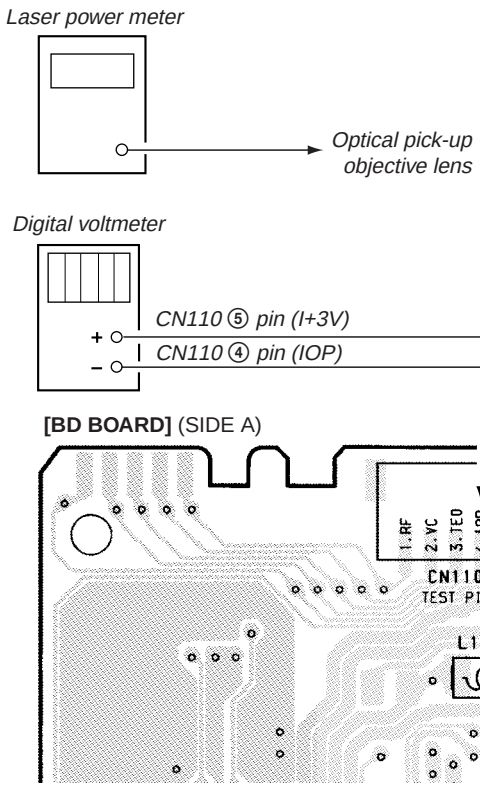

Procedure:

1. Insert the laser power meter into the disk loading port and set atop the objective lens of the optical pickup (if this cannot be done successfully, shift the optical pickup using the ◀◀ and ▶▶ buttons).
   Connect the digital voltmeter to the CN110 ⑤ pin (I+3V) and CN110 ④ pin (IOP).
2. Turn the AMS dial until " LDPWR ADJUST " is displayed. (Laser power: adjustment purposes)
3. Press the YES/ENTER button once to display " LD 0.9mW $ ▯▯ ".
4. Turn the AMS dial so that the laser power meter reading is between 0.86 – 0.92mW. After setting the range dial of the laser power meter to 10mW, press the YES/ENTER button to save the adjustment result to the non-volatile storage memory (at this time, " LD SAVE $ ▯▯ " will be displayed for an instant).
5. Next, " LD 7.0mW $ ▯▯ " will be displayed.
6. Turn the AMS dial so that the laser power meter reading is between 6.9 – 7.1mW, then press the YES/ENTER button to save the adjustment result (at this time, " LD SAVE $ ▯▯ " will be displayed for an instant).

Note: Do not emit the 7.0mW emission more than 15 seconds continuously.

7. Next, turn the AMS dial until " LDPWR CHECK " is displayed.
8. Press the YES/ENTER button once to display " LD 0.9mW $ ▯▯ ".
   At this time, check to see that the laser power meter reading is between 0.85 – 0.91mW.
9. Next, press the YES/ENTER button once more to display " LD 7.0mW $ ▯▯ ".
   At this time check to see that the laser power meter and digital voltmeter reading comply with the specified values.

Specified values:

Laser power meter reading : 6.9–7.1mW
Digital voltmeter reading : ±10% the value on the label of the optical pickup.

(Optical pick-up label)

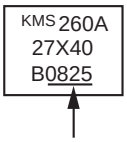

In this case, Iop = 82.5mA
Iop(mA) = digital voltmeter reading (mV)/1(Ω)

10. Press the NO/CANSEL button to display " LDPWR CHECK " and stop laser emission. (The NO/CANSEL button can be used at anytime to stop laser emission)

5-7. TRAVERSE ADJUSTMENT

Connection:

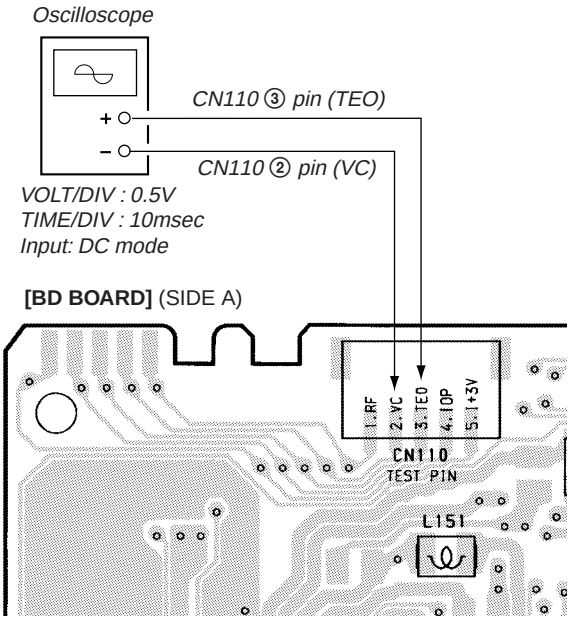

Procedure:

1. Connect the oscilloscope to the CN110 ③ pin (TEO) and CN110 ② pin (VC) of the BD board.
2. Insert a disk (any commercially available disk) that may be recorded on (see Note 1).
3. Press the ◀◀ or ▶▶ button to shift the optical pick-up to the outer edge of the pit.
4. Turn the AMS dial until " EFBAL ADJUST " is displayed.
5. Press the YES/ENTER button to display " EFB= ▯▯ MO-R ". (The unit will be in the condition of: laser power READ power, focus servo ON, tracking servo OFF and spindle (S) servo ON.)
6. Turn the AMS dial so that the waveform on the oscilloscope is that of the specified value (turning the AMS dial will change the numbers of " EFB= ▯▯ " as well as the waveform). During this adjustment, the waveform changes for approximately every 2%. Adjust the waveform closest to the specified value. (read power traverse adjustment)

(Traverse waveform)

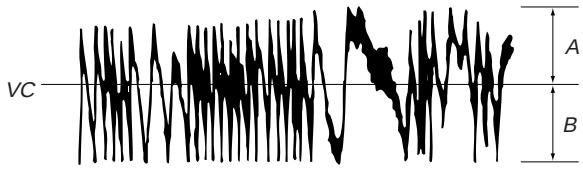

Specification: A=B

7. Press the YES/ENTER button to save the adjustment result to the non-volatile storage memory (at this time " EFB= □ SAVE " will be displayed for an instant, then " EFB= □ MO-W " will be displayed).
8. Turn the AMS dial so that the waveform on the oscilloscope is that of the specified value (turning the AMS dial will change the numbers of " EFB= □ " as well as the waveform). During this adjustment, the waveform changes for approximately every 2%. Adjust the waveform closest to the specified value.
(write power traverse adjustment)

(Traverse waveform)

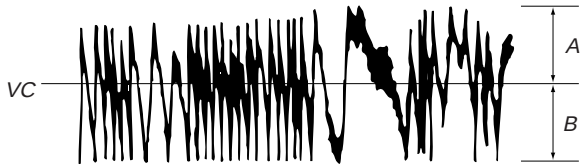

Specification: A=B

9. Press the YES/ENTER button to save the adjustment result to the non-volatile storage memory (at this time " EFB= □ SAVE " will be displayed for an instant).
10 " EFB= □ MO-P " will then be displayed and the servo will be activated after the optical pickup is automatically shifted to the inner edge of the pit.
11. At this time, turn the AMS dial so that the waveform on the oscilloscope is that of the specified value. During this adjustment, the waveform changes for approximately every 2%. Adjust the waveform closest to the specified value.

(Traverse waveform)

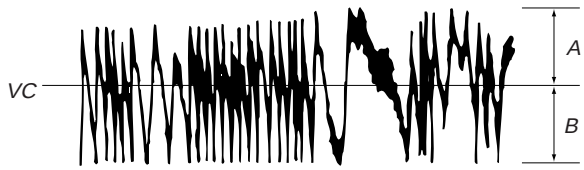

Specification: A=B

12. Press the YES/ENTER button to save the adjustment result to the non-volatile storage memory (at this time " EFB= □ SAVE " will be displayed for an instant). "EFBAL CD" will then be displayed and the rotation of the disk will automatically stop.
13. Press the MD EJECT button to remove the disk.
14. Insert the check disk (MD) TDYS-1.
15. Press the YES/ENTER button to display " EFB= □ CD ". The servo will automatically be activated.
16. Turn the AMS dial so that the waveform on the oscilloscope is that of the specified value. During this adjustment, the waveform changes for approximately every 2%. Adjust the waveform closest to the specified value.

(Traverse waveform)

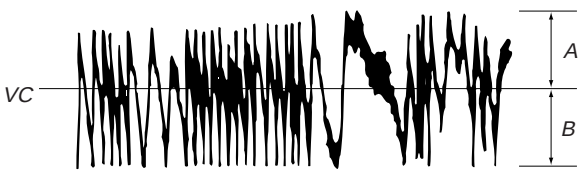

Specification: A=B

17. Press the YES/ENTER button to save the adjustment result to the non-volatile storage memory (at this time "EFB= □ SAVE" will be displayed for an instant). "EFBAL ADJUST" will then be displayed.
18. Press the MD EJECT button to remove the check disk (MD) TDYS-1.

Note 1: When using a pre-recorded disk for adjustment, data will be deleted during MO write.
Note 2: If the traverse waveform is hard to see, reconnect the oscilloscope as shown below for easier view.

Oscilloscope

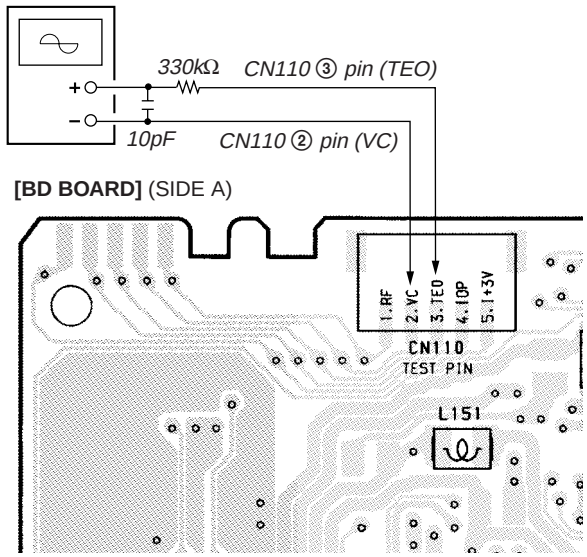

5-8. FOCUS BIAS ADJUSTMENT

Procedure:

1. Insert a continuously recorded disk (see 5-4. Creating a continuous recording disk).
2. Turn the AMS dial until "CPLAY MODE" is displayed.
3. Press the YES/ENTER button to display "CPLAY MID".
4. When "C1= □□□□ AD= □□ " is displayed, press the NO/CANCEL button.
5. Turn the AMS dial until "FBIAS ADJUST" is displayed.
6. Press the YES/ENTER button to display " □□□□ / □□ a= □□ ". The first 4 digits indicate the C1 error rate, the 2 digits following "/" indicate ADER and the 2 digits following "a=" indicate the focus bias volume.
7. Turn the AMS dial clockwise and search the focus bias volume closest to the C1 error rate of 220 (see Note 2).
8. Press the YES/ENTER button to display " □□□□ / □□ b= □□ ".
9. Turn the AMS dial counterclockwise and search the focus bias volume which is the C1 error rate of 220.
10. Press the YES/ENTER button to display " □□□□ / □□ c= □□ ".
11. Press the YES/ENTER button after making sure that the C1 error rate is below 50 and ADER is 00.
12. Press the YES/ENTER button if the value indicated in the " □□ - □□ - □□ (□□)" display is more than 20.
Otherwise, press the NO/CANCEL button and repeat procedure from step 2.
13. Press the MD EJECT button to remove the continuously recorded disk.

Note 1: The relationship of the C1 error and focus bias volume is shown in the diagram below. Find points a and b shown in the diagram by following the procedure above. The met focal point C is found by automatic calculation.
Note 2: The C1 error rate fluctuates. Thus, make the adjustment using the average value.

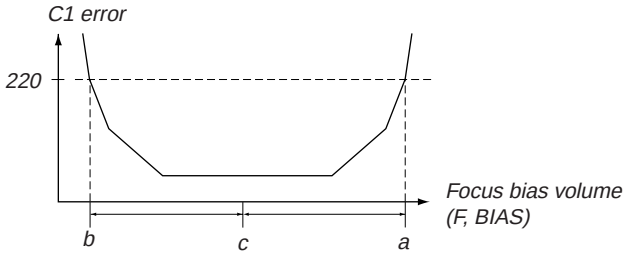

5-9. ERROR RATE CHECK

5-9-1. Pit disk error rate check

Procedure:

1. Insert the check disk (MD) TDYS-1
2. Turn the AMS dial until " CPLAY MODE " is displayed.
3. Press the YES/ENTER button to display " CPLAY MID ".
4. The display will change to " C1= [][][][] AD= [][] ".
5. Check to see that the C1 error rate is less than 20.
6. Press the NO/CANCEL button to stop playback, then press the MD EJECT button to remove the check disk (MD).

5-9-2. MO error rate check

Procedure:

1. Insert a continuously recorded disk (see 5-4. Creating a continuous recording disk).
2. Turn the AMS dial until " CPLAY MODE " is displayed.
3. Press the YES/ENTER button to display " CPLAY MID ".
4. The display will change to " C1= [][][][] AD= [][] ".
5. Check to see that the C1 error rate is less than 50 and ADER is constantly not above 00.
6. Press the NO/CANCEL button to stop playback, then press the button to remove the continuously recorded disk.

5-10. FOCUS BIAS CHECK

The focus tolerance volume is checked by changing the focus bias volume.

Procedure:

1. Insert a continuously recorded disk (see 5-4. Creating a continuous recording disk).
2. Turn the AMS dial until "CPLAY MODE" is displayed.
3. Press the YES/ENTER button to display "CPLAY MID".
4. When "C1= [][][][] AD= [][] " is displayed, press the NO/CANCEL button.
5. Turn the AMS dial until "FBIAS CHECK" is displayed.
6. Press the YES/ENTER button to display " [][][][] / [][] c= [][] ".
   The first 4 digits indicate the C1 error, the 2 digits following " / " indicate ADER and the 2 digits following "c=" indicate the focus bias volume.
   At this time, check to see that the C1 error is less than 50 and ADER is 00.
7. Press the YES/ENTER button to change the display to " [][][][] / [][] b= [][] "
   At this time check to see that the C1 error is not less than 220 and ADER is constantly not above 00.
8. Press the YES/ENTER button to change the display to " [][][][] / [][] a= [][] "
   At this time check to see that the C1 error is not less than 220 and ADER is constantly not above 00.
9. Press the NO/CANCEL button, then press the MD EJECT button to remove the continuously recorded disk.

Note 1: If the C1 error or ADER is more than 00 for only one of points a (8. above) and b (7. above), there is the possibility of a gap in the focus bias adjustment. In such case, repeat adjustment.

CD SECTION

1. Enter the CD Test mode
   (see page 19)

88 07 00 3A0

The above is the default display.
Pressing the ►II button will rotate the CD and pressing the YES/ENTER button once more will output sounds.
Pressing the YES/ENTER button will execute automatic adjustment and values will change; however, this value is quite normal.

2. RF LEVEL and jitter check
   Test mode PLAY status ("21" and "ALL" display ON)

21 07 00 3A0
ALL

ALL display ON : LPC (laser power control ON)
ALL display OFF : LPC (laser power control OFF)
(►II button : ALL display ON/OFF)

Connection Point:

[MAIN BOARD] (SIDE A)

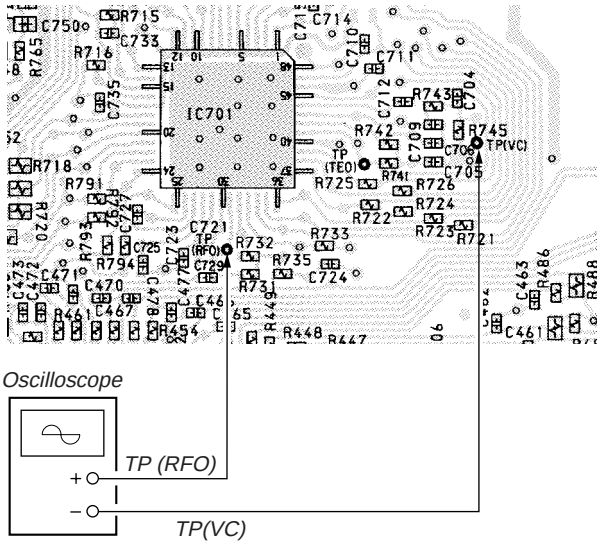

Check to see that the jitter is less than 9.0 nsec.
and RF level is between 1.0 – 1.5Vp-p.

VOLT/DIV : 200mV (using 10:1 probe)
TIME/DIV : 500ns

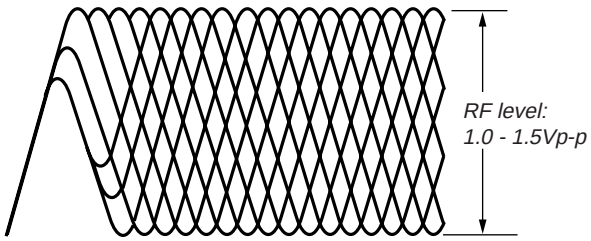

3. Traverse signal check

Connection Point:

[MAIN BOARD] (SIDE A)

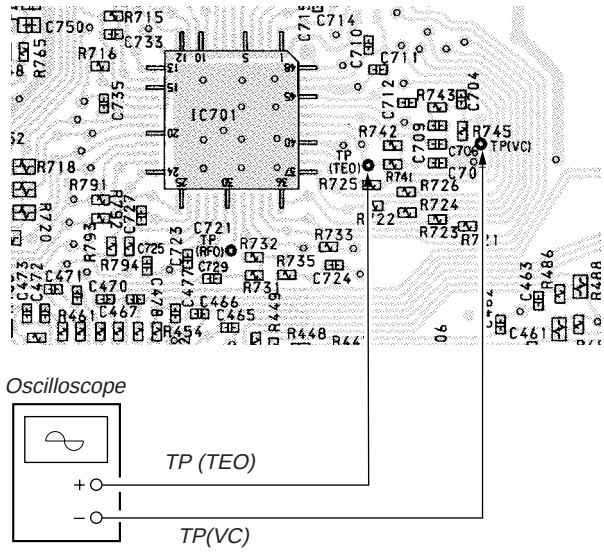

Press the FF or FR from step2.
Check to see that the traverse signal level is between 280 - 480mVp-p.

Note:
Extend the sweep time for easier view.

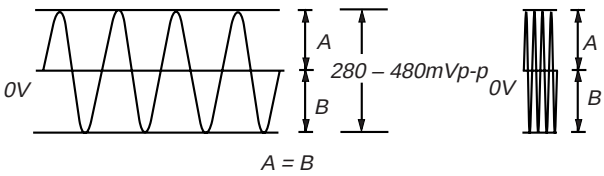

4. After completed with adjustment, press the RESET button to release the test mode.

DISPLAY SECTION

DIMMER ADJUSTMENT

1. Connect the LCD1 to the CN533 of the LCD board.
2. Connect the digital voltmeter to the CN533 ⑧ pin of the LCD board.
3. Adjust the RV550 of the LCD board for 2.83V reading on digital voltmeter.
   Standard value : 2.83 – 2.93V

Connection Point:

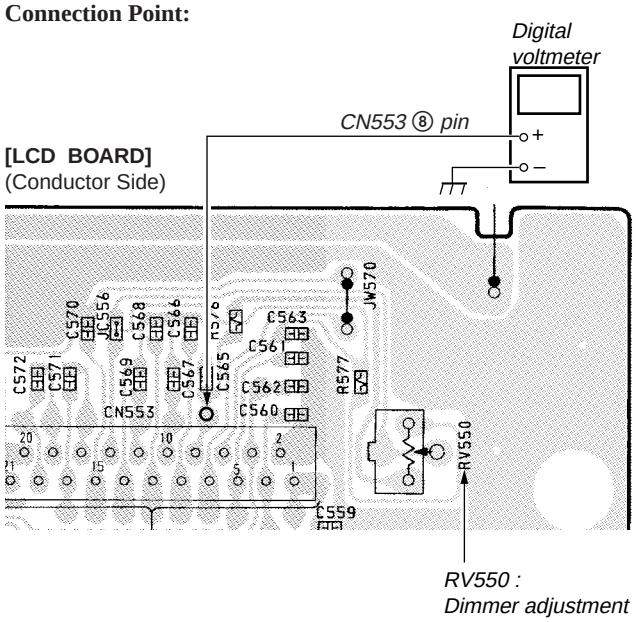

TUNER SECTION 0dB=1μV

AM Section

Function switch : MW or LW
Volume : MIN

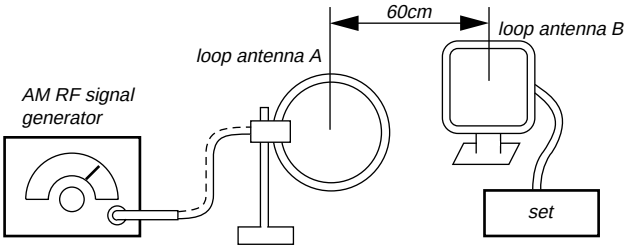

30% amplitude modulation by 400Hz signal
Output level : as low as possible

FM Section

Function switch : FM
Volume : MIN
FM ANTENNA SELECTOR switch : EXT

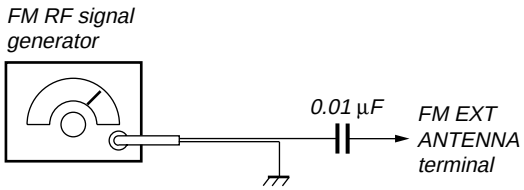

22.5kHz frequency deviation by 400Hz signal.
Output level : as low as possible

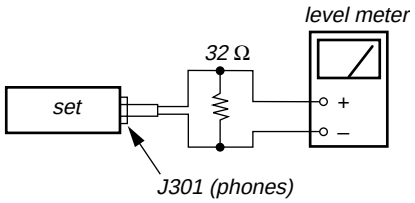

- Repeat the procedures in each adjustment several times, and the frequency coverage and tracking adjustments should be finally done by the trimmer capacitors.

MW/LW IF ADJUSTMENT	
Adjust for a maximum reading on level meter.	
CFT1	450kHz

MW FREQUENCY COVERAGE ADJUSTMENT		
Adjust part	Frequency display	reading on digital voltmeter.
L5	531kHz	Adjustment value :1.0V Standard value : 0.8 – 1.2V
CT4	1,611kHz	Adjustment value :5.4V Standard value : 5.0 – 5.8V

MW TRACKING ADJUSTMENT	
Adjust for a maximum reading on level meter.	
L4	621kHz
CT2	1,404kHz

LW FREQUENCY COVERAGE ADJUSTMENT		
Adjust part	Frequency display	reading on digital voltmeter
Confirmation	153kHz	Standard value : 0.5 – 0.9V
CT3	297kHz	Adjustment value :5.5V Standard value : 5.1 – 5.9V

LW TRACKING ADJUSTMENT	
Adjust for a maximum reading on level meter.	
L3	162kHz
CT1	261kHz

Connect and Adjustment Location :

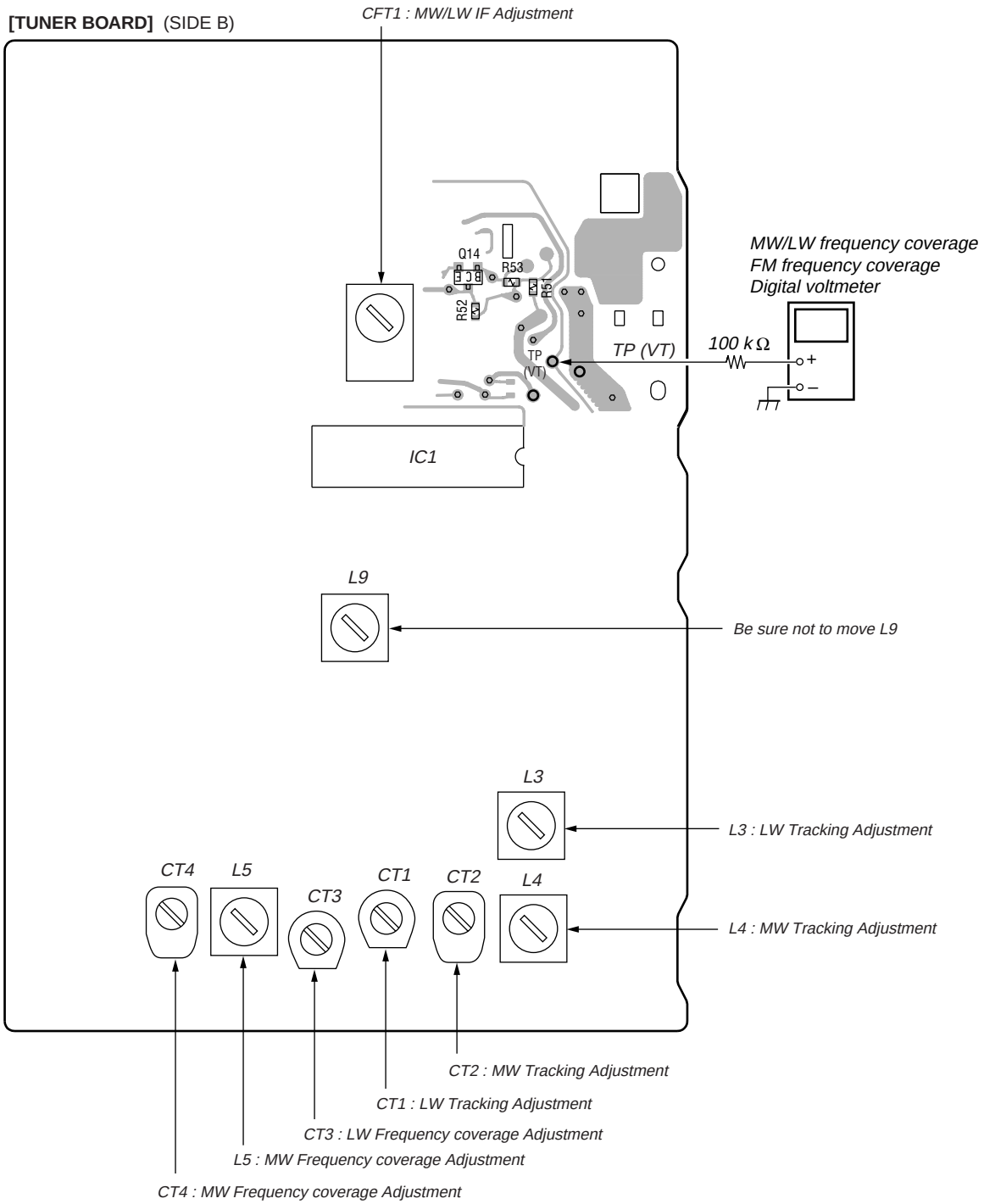

SECTION 6
DIAGRAMS

6-1. EXPLANATION OF IC TERMINALS

BD BOARD IC101 MD SECTION RF AMPLIFIER (CXA2523R)

Pin No.	Pin name	I/O	Description
1	I	I	Input of RF signal l converted from I to V
2	J	I	Input of RF signal J converted from I to V.
3	VC	O	Midpoint voltage (+1.5V) generation output.
4 - 9	A–F	I	Signal inputs from optical pickup detector.
10	PD	I	Light volume monitor input.
11	APC	O	Laser APC output.
12	APCREF	I	Reference voltage input for laser power setting.
13	GND	–	Ground.
14	TEMPI	I	Temperature sensor connection terminal.
15	TEMPR	O	Reference voltage output for temperature sensor.
16	SWDT	I	Serial data input from CXD2652AR.
17	SCLK	I	Serial clock input from CXD2652AR.
18	XLAT	I	Latch signal input from CXD2652AR. “L”: Latch
19	XSTBY	I	Standby signal input. “L”: Standby
20	FOCNT	I	Center frequency control voltage input of internal circuits BFF22, BPF3T and EQ from CXD2652AR.
21	VREF	O	Reference voltage output (not used).
22	EQADJ	I/O	Pin for center frequency setting of internal circuit EQ.
23	3TADJ	I/O	Pin for center frequency setting of internal circuit BPF3T.
24	VCC	–	Power supply (+3V).
25	WBLADJ	I/O	Pin for center frequency setting of internal circuit BPF22.
26	TE	O	Tracking error signal output to CXD2652AR.
27	CSLED	–	External condenser connector pin for thread error signal LPF.
28	SE	O	Thread error signal output to CXD2652AR.
29	ADFM	O	ADIP FM signal output.
30	ADIN	I	ADIP signal comparator input ADFM connection by coupling with AC.
31	ADAGC	–	External condenser connector pin for AGC of ADIP.
32	ADFG	O	ADIP duplex signal output to CXD2652AR.
33	AUX	O	I3 signal/temperature signal output (switched by serial command) to CXD2652AR.
34	FE	O	Focus error signal output to CXD2652AR.
35	ABCD	O	Light volume signal output to CXD2652AR.
36	BOTM	O	RF/ABCD bottom hold signal output to CXD2652AR.
37	PEAK	O	RF/ABCD peak hold signal output to CXD2652AR.
38	RF	O	RF equalizer output to CXD2652AR.
39	RFAGC	–	RF AGC circuit external condenser connector pin.
40	AGCI	I	Input RF amplifier output is input to RF AGC circuit by coupling with AC.
41	COMPO	O	User comparator output (not used).
42	COMPP	I	User comparator input (Fixed at “L”).
43	ADDC	I/O	Low-pass cutoff external capacitor terminal of ADIP amplifier.
44	OPO	O	User op amplifier output (not used).
45	OPN	I	User op amplefier inverted input (Fixed at “L”).
46	RFO	O	RF amplifier output.
47	MORFI	I	Group RF signal input by coupling with AC.
48	MORFO	O	Group RF signal output.

APC : Auto Power Control
AGC : Auto Gain Control

MAIN BOARD (2/2) IC405 SYSTEM CONTROL (CXP740096-019Q)

Pin No.	Pin name	I/O	Description
1	MD	O	MD function output.
2	RADIO/LINE	O	Radio/LINE function output.
3	ACCHK	I	AC power supply detection input. L : Supplied H : Not supplied
4	NC	–	Not used (OPEN).
5	NC	–	Not used (OPEN).
6	NC	–	Not used (OPEN).
7	RDS - DATA	I	RDS serial data input.
8	NC	–	Not used (OPEN).
9	RDS - CLK	I	RDS serial clock input.
10	CD - TURN	I	CD ON/OFF detection input.
11	NC	–	Not used (OPEN).
12	CD - OPEN	O	CD tray control output. H : OPEN
13	CD - CLOSE	O	CD tray control output. H : CLOSE
14	NC	–	Not used (OPEN).
15	NC	–	Not used (OPEN).
16	NC	–	Not used (OPEN).
17	MD - H	O	D/A converter down signal output (MD play).
18	REC - H	O	D/A converter down signal output (MD recording).
19	MD - RST	O	Reset signal output for MD system control.
20	MD - SCTS	O	UART send request output to MD.
21	MD - SRTS	I	UART send request input from MD.
22	MD - PDOWN	O	Notification of power cutoff to MD.
23	D/LCON	O	Back light ON/OFF control output.
24	LCD - RST	O	Reset signal output to LCD.
25	LCD - CE	O	Chip enable output to LCD.
26	LCD - A0	O	Address output to LCD.
27	LED - MD	O	MD LED drive output.
28	LED - RADIO	O	BAND LED drive output.
29	LED - CD	O	CD LED drive output.
30	NC	–	Not used (OPEN).
31	RADIO POWER	O	Radio power supply ON/OFF control output.
32	CD POWER	O	CD power supply ON/OFF control output.
33	NC	–	Not used (OPEN).
34	NC	–	Not used (OPEN).
35	NC	–	Not used (OPEN).
36	NC	–	Not used (OPEN).
37	NC	–	Not used (OPEN).
38	NC	–	Not used (OPEN).
39	TU - SFT	O	System clock shift output.
40	RST	I	System reset terminal.
41	VSS	–	Ground.
42	XTAL	I	System clock (8MHz) oscillation input.
43	EXTAL	O	System clock (8MHz) oscillation output.
44	SELECT - GND	O	Destination select terminal.
45	HP - SW	I	Headphone detection input.
46	LCD - DATA	O	Serial data output to LCD.
47	LCD - CLK	O	Serial clock output to LCD.
48	CD - DOOR	I	CD tray Open/Close detection input.
49	JOG - A	I	Jog dial rotation detection input (A).
50	JOG - B	I	Jog dial rotation detection input (B).

Pin No.	Pin name	I/O	Description
51	SELECT	I	Destination select detection input.
52	AVSS	–	A/D converter ground terminal.
53	AVREF	–	A/D converter reference voltage input.
54	AVDD	–	A/D converter power supply terminal.
55	LED - PRESET/AMS	O	AMS/PRESET LED drive output.
56	LED - SELECT	O	SELECT LED drive output.
57	LINE	O	Function LINE output.
58	LINE - LEVEL	O	LINE level control signal output.
59	KEY4	I	Key input (4).
60	KEY3	I	Key input (3).
61	KEY2	I	Key input (2).
62	KEY1	I	Key input (1).
63	TU - MUTE	O	Radio mute drive signal output.
64	TU - COUNT	I	Radio PLL data input.
65	TU - CLK	O	Radio PLL clock output.
66	TU - DATA	O	Radio PLL data output.
67	TU - CE	O	Radio PLL chip enable output.
68	NC	–	Not used (OPEN).
69	MD - SRXD	I	Communicate with MD and UART receive input.
70	MD - STXD	O	Communicate with MD and UART send output.
71	NC	–	Not used (OPEN).
72	NC	–	Not used (OPEN).
73	CD - XRST	O	CD system reset signal output.
74	CD - CLK	O	CD serial clock output.
75	CD - XLAT	O	CD system lack output.
76	CD - DATA	O	CD serial data output.
77	CD - SENSE1	I	CD SENSE 1 input.
78	CD - SCOR	I	CD SCOR input.
79	CD - SQSO	I	CD SUB Q data input.
80	CD - SHORT	I	CD POWER circuit short detection input.
81	CD - SQCK	O	CD SUB Q clock output.
82	CD - MUTE	O	CD system mute output.
83	CD - FOK	I	CD FOK input.
84	CD - SENSE2	I	CD SENSE 2 input.
85	RMC	I	Remote control signal input.
86	TEX	I	Real clock oscillation input (32.768kHz).
87	TX	O	Real clock oscillation output (32.768kHz).
88	VSS	–	Ground.
89	VDD	–	Power supply terminal.
90	NC	–	Not used (OPEN).
91	NC	–	Not used (OPEN).
92	NC	–	Not used (OPEN).
93	SPEED - L	O	Open/Close motor drive output.
94	AU - DATA	O	AUDIO data output.
95	AU - CLK	O	AUDIO clock output.
96	B/L - CONT	O	Back light ON/OFF control output.
97	PA - STANDBY	O	Power amplifier ON/Standby control output.
98	AMUTE	O	Audio mute signal output.
99	CD	O	CD function output.
100	P - CON	O	POWER ON/OFF control.

• BD BOARD IC121 digital signal processor, digital servo signal processor, EFM/ACIRC encoder/decoder, shock-proof memory controller, ATRAC encoder/decoder, 2Mbit DRAM (CXD2652AR)

Pin No.	Pin name	I/O	Description
1	MNT0(FOK)	O	FOK signal output to system control. H is outputted when in focus.
2	MNT1(SHCK)	O	Track-jump detection signal output to system control.
3	MNT2(XBUSY)	O	Monitor 2 output to system control.
4	MNT3(SLOC)	O	Monitor 3 output to system control.
5	SWDT	I	Write-data signal input from system control.
6	SCLK	I(S)	Serial clock signal input from system control.
7	XLAT	I(S)	Serial latch signal input from system control.
8	SRDT	O(3)	Read-data signal output to system control .
9	SENS	O(3)	Internal status (SENSE) output to system control.
10	XRST	I(S)	Reset signal input from system control. "L": Reset
11	SQSY	O	Subcode Q-SYNC (SCOR) output to system control. Majority of those which output "L" every 13.3 seconds output "H".
12	DQSY	O	Subcode of digital-in U-bit CD format to system control. Majority of those which outputs "L" every 13.3 seconds during output of Q-SYNG (SCOR) outputs "H".
13	RECP	I	Laser power switch input from system control "H": Record, "L": Playback.
14	XINT	O	Interrupt status output to system control.
15	TX	I	Record data output authorization input from system control.
16	OSCI	I	System clock input (512Fs = 22.5792MHz).
17	OSCO	O	System clock output (512FS = 22.5792MHz).
18	XTSL	I	Pin for system clock frequency setting . "L": 45.1584MHz "H": 22.5792MHz (Fixed at "H").
19	TEST G	–	Test terminal.
20	DVSS	–	Ground (digital system).
21	DIN	I	Digital audio input (for optical input).
22	DOUT	O	Digital audio output (for optical output).
23	ADDT	I	Data input from A/D converter.
24	DADT	O	Data output to D/A converter.
25	LRCK	O	LR clock output (44.1kHz) for A/D and D/A converters.
26	XBCK	O	Bit clock output (2.8224MHz) for A/D and D/A converters.
27	FS256	O	11.2896MHz clock output (unused).
28	DVDD	–	Power supply for digital (+3V).
29–32	A03–A00	O	DRAM address outputs.
33	A10	O	
34–38	A04–A08	O	
39	A11	O	
40	DVSS	–	Ground for digital.
41	XOE	O	DRAM output-enable output.
42	XCAS	O	DRAM CAS signal output.
43	A09	O	DRAM address output.
44	XRAS	O	DRAM RAS signal output.
45	XWE	O	DRAM write-enable signal output.
46	D1	I/O	DRAM data I/O.
47	D0	I/O	
48, 49	D2,D3	I/O	
50	MVCI	I(S)	Clock input from external VCO (Fixed at "L").

* In the I/O column, I(S) is Schmitt input, I(A) is analog input, O(3) is state output and O(A) is analog output.

Pin No.	Pin name	I/O	Description
51	ASYO	O	Playback EFM duplex signal output.
52	ASYI	I(A)	Playback EFM comparator slice level input.
53	AVDD	–	Power supply for analog (+3V).
54	BIAS	I(A)	Playback EFM comparator bias current input.
55	RFI	I(A)	Playback EFM RF signal input.
56	AVSS	–	Ground for analog.
57	PDO	O(3)	Phase comparison output for clock playback analog PLL of playback EFM (not used).
58	PCO	O(3)	Phase comparison output for record/playback EFM system master PLL.
59	FILI	I(A)	Filter input for record/playback EFM system master PLL.
60	FILO	O(A)	Filter output for record/playback EFM system master PLL.
61	CLTV	I(A)	Internal VCO control voltage input for record/playback EFM system master PLL15.
62	PEAK	I(A)	Light volume signal peak hold input from CXA2523AR.
63	BOTM	I(A)	Light volume signal bottom hold input from CXA2523AR.
64	ABCD	I(A)	Light volume signal input from CXA2523AR.
65	FE	I(A)	Focus error signal input from CXA2523AR.
66	AUX1	I(A)	Auxiliary A/D input.
67	VC	I(A)	Midpoint voltage (+1.5V) input from CXA2523AR.
68	ADIO	O(A)	A/D converter input signal monitor output (not used).
69	AVDD	–	Power supply for analog (+3V).
70	ADRT	I(A)	A/D converter operating range upper limit voltage input (Fixed at "H") .
71	ADRB	I(A)	A/D converter operating range lower limit voltage input (Fixed at "L").
72	AVSS	–	Ground for analog.
73	SE	I(A)	Thread error signal input from CXA2523AR.
74	TE	I(A)	Tracking error signal input from CXA2523AR.
75	AUX2	I(A)	Auxiliary A/D input (Fixed at "L").
76	DCHG	I(A)	Connected to +3V power supply.
77	APC	I(A)	Laser digital APC error signal input (Fixed at "L").
78	ADFG	I(S)	ADIP duplex FM signal input (22.05±1kHz) from CXA2523AR.
79	F0CNT	O	Filter f0 control output from CXA2523AR.
80	XLRF	O	Control latch output from CXA2523AR.
81	CKRF	O	Control clock output from CXA2523AR.
82	DTRF	O	Control data output from CXA2523AR.
83	APCREF	O	Laser APC reference PWM output.
84	LDDR	O	Laser digital APC PWM output (not used).
85	TRDR	O	Tracking servo drive PWM output (-).
86	TFDR	O	Tracking servo drive PWM output (+).
87	DVDD	–	Power supply for digital (+3V).
88	FFDR	O	Focus servo drive PWM output (+).
89	FRDR	O	Focus servo drive PWM output (-).
90	FS4	O	176.4kHz clock signal output (X'tal) (not used).
91	SRDR	O	Thread servo drive PWM output (-).
92	SFDR	O	Thread servo drive PWM output (+).
93	SPRD	O	Spindle servo drive PWM output (-).
94	SPFD	O	Spindle servo drive PWM output (+).
95	FGIN	I(S)	Spindle CAV servo FG input.
96–98	TEST1–TEST3	I	Test input pins (Fixed at "L").
99	DVSS	–	Ground for digital.
100	EFMO	O	EFM output during recording.

EFM : Eight to Fourteen Modulation
PLL : Phase Locked Loop
VCO : Voltage Controlled Oscillator

DG BOARD IC601 SYSYTEM CONTROL (RU8X12MF-0021)

Pin No.	Pin name	I/O	Description
1	DAOUT0	–	not used (OPEN).
2	DAOUOT1	–	not used (OPEN).
3	KEY0	–	Reserved ("H" level).
4	KEY1	–	Reserved ("H" level).
5	KEY2	–	Reserved ("H" level).
6	CHACK IN	I	Detection input from chucking-in switch (S685).
7	PACK IN	I	Detection input from back-in switch (not used).
8	PACK OUT	I	Detection input from back-out switch (S686).
9		–	not used (ground connection).
10		–	not used (ground connection).
11	AVSS	–	ground for analog.
12	X INT	I	Interrupt status input from digital signal processor IC (IC121).
13	PDOWN	I	Power cutoff signal input from master control IC (IC801).
14		–	Reserved (ground connection).
15	SQSY	I	Subcode Q-SYNC (SCOR) input from digital signal processor IC (IC121).
16	DQSY	I	Digital-in U-bit format subcode input from digital signal processor IC (IC121).
17		–	Reserved (ground connection).
18		–	Reserved (ground connection).
19		–	Reserved (ground connection).
20	$\overline{\text{SYS-RST}}$	I	System reset input pin "L": Reset.
21	TEST	I	Test mode pin "L": Normal mode, "H": Test mode.
22	+3.3V	–	Power supply terminal (VCC).
23	VBAT	I	Power supply pin for internal RTC and RAM.
24	XOUT-T	O	Sub-clock connector pin (32.768kHz).
25	XINT-T	I	Sub-clock connector pin (32.768kHz).
26	GND	–	Power supply terminal (ground).
27	XOUT	O	Main clock connector pin (12MHz).
28	XIN	I	Main clock connector pin (12MHz).
29	EXEM	I	Switch pin for External ROM mode and Internal ROM mode.
30	S1	–	not used (OPEN).
31		–	Reserved (ground connection).
32	SENS	I	Internal status (SENSE) input from digital signal processor IC (IC121).
33	SHOCK	I	Track-jump detection signal input from digital signal processor IC (IC121).
34		–	Reserved (ground connection).
35		–	Reserved (ground connection).
36	STB	O	Power ON/OFF control signal output.
37	REC P	I	Detection input from REC switch (S688).
38	PB P	I	Detection input from PB switch (S687).
39	LD LOW	O	Loading motor control signal output.
40	NC	–	not used (OPEN).
41	MNT2	I	Monitor 2 input from digital signal processor IC (IC121).
42	MNT3	I	Monitor 3 input from digital signal processor IC (IC121).
43	LEDO	–	not used (OPEN).
44		–	Reserved (ground connection).
45		–	Reserved (ground connection).
46	RST LOW	–	not used (OPEN).
47	GND	–	Power supply terminal (ground).
48	+3.3V	–	Power supply terminal (VCC).
49	SNG/CHG	–	Reserved (ground connection).
50	JOG1	–	Reserved (ground connection).

Pin No.	Pin name	I/O	Description
51	JOG0	–	Reserved (ground connection).
52	SDA	I/O	Serial data I/O with EEPROM (IC171).
53	SCL	O	Serial clock output to EEPROM (IC171).
54	2M/4M	–	Reserved ("H" level).
55		–	Reserved (ground connection).
56		–	Reserved (ground connection).
57	RXD (UART)	O	Communication with master control IC (IC801) and UART receive output.
58	TXD (UART)	I	Communication with master control IC (IC801) and UART send input.
59	RTS (T)	I	UART send request input from master control IC (IC801).
60	CTS (R)	O	UART send request output to master control IC (IC801).
61	AUBIT0	–	Reserved ("H" level).
62	AUBIT1	–	Reserved (ground connection).
63	CLKSET0	–	Reserved (ground connection).
64	CLKSET1	–	Reserved (ground connection).
65	GND	–	Power supply pin (ground).
66	+3.3V	–	power supply pin (VCC).
67	SCLK	O	Serial clock output to digital signal processor IC (IC201).
68	SWDT	O	Write data signal output to digital signal processor IC (IC121).
69	SRDT	I	Read data signal input from digital signal processor IC (IC121).
70	EMP	O	Delmphasis ON/OFF control signal output.
71	SCK1	–	not used (OPEN).
72	SOUT1	–	not used (OPEN).
73	SIN1	–	not used (OPEN).
74	CSB	–	Reserved (VCC connection).
75	LDON	O	Laser ON/OFF control signal output.
76	PIT/GRV	–	not used (OPEN).
77	FOK	I	Focus OK signal input from digital signal processor IC (IC121).
78		–	not used (OPEN).
79	LOCK	–	not used (OPEN).
80	WRPWR	O	Laser power switch signal output to digital signal processor IC (IC121).
81	$\overline{\text{DIG-RST}}$	O	Reset signal output.
82		–	not used (OPEN).
83	$\overline{\text{DA-RST}}$	O	Reset signal output to D/A and A/D converters "L": reset.
84	DSEL-A	–	not used (OPEN).
85	DSEL-B	–	not used (OPEN).
86	MOD	O	MD module ON/OFF control signal output.
87	REC/$\overline{\text{PB}}$	–	not used (OPEN).
88		–	not used (OPEN).
89	SCTX	O	Record data output authorization signal output.
90	XLATCH	O	Serial latch signal output to digital signal processor IC (IC121).
91		–	not used (OPEN).
92		–	not used (OPEN).
93	AMUTE	–	not used (OPEN).
94	LD OUT	O	Loading motor F control signal output.
95	LD IN	O	Loading motor F control signal output.
96	LIMIT IN	I	Detection input from limit switch (S681).
97	PROTECT	I	Record tab detection input from disk write-protect switch (S683).
98	REFLECT	I	Disk reflection rate detection input from reflect switch (S682).
99	GND	–	Power supply terminal (ground).
100	+3.3V	–	Power supply terminal (VCC).

6-2. BLOCK DIAGRAM (MAIN SECTION)

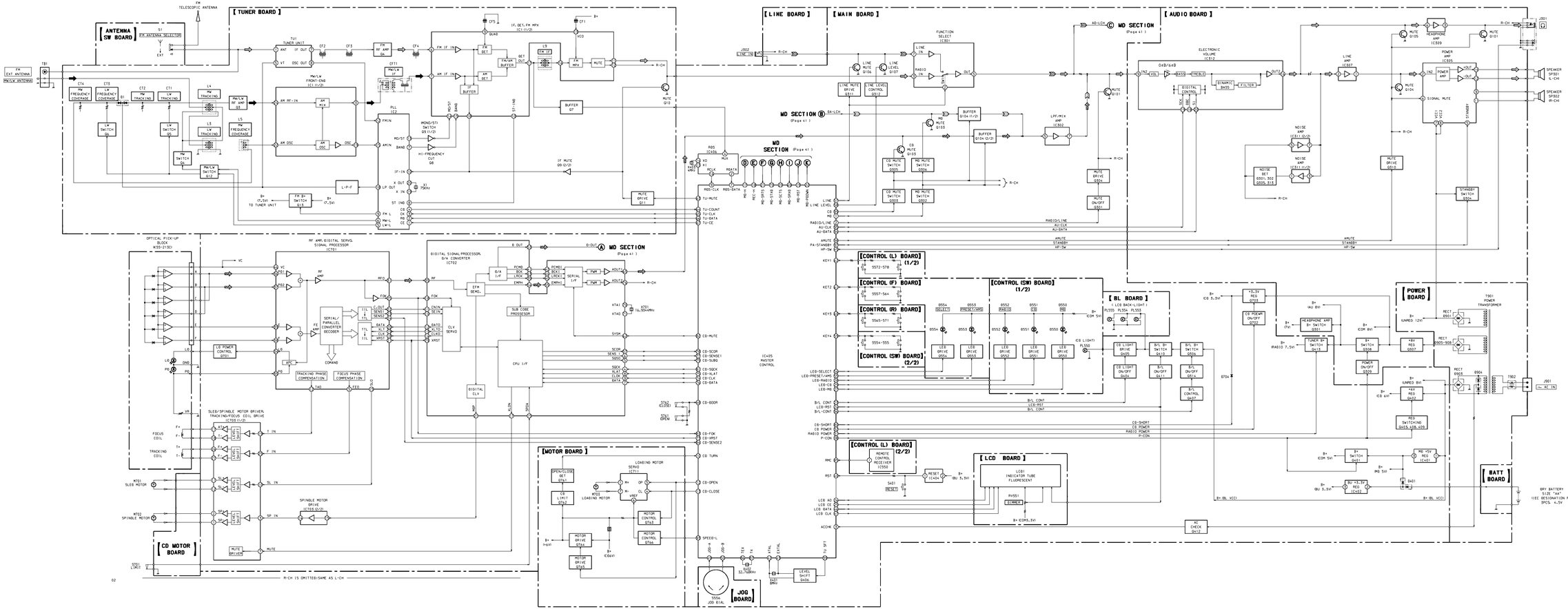

- Signal path.
  - : FM
  - : MW/LW
  - : MD PLAY
  - : MD REC
  - : CD

6-3. BLOCK DIAGRAM (MD SECTION)

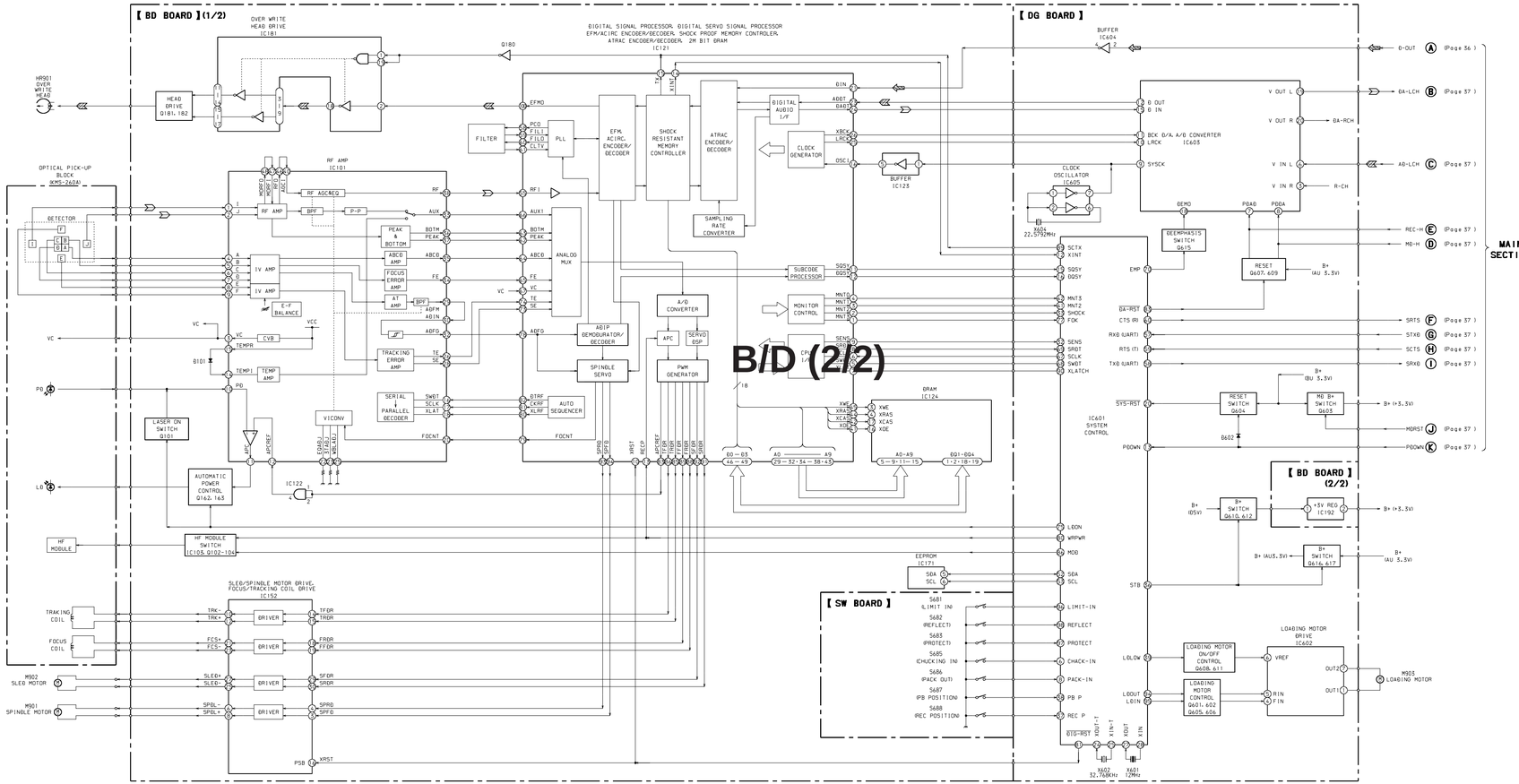

• Signal path.
: MD PLAY
: MD REC
: CD

● Circuit Boards Location

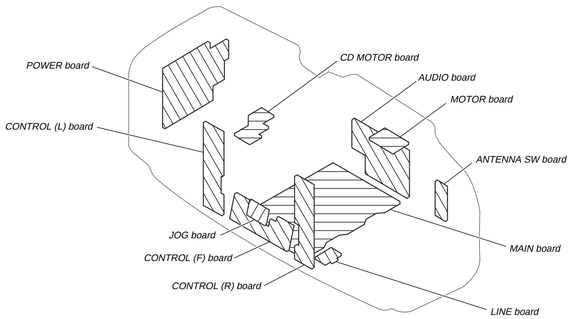

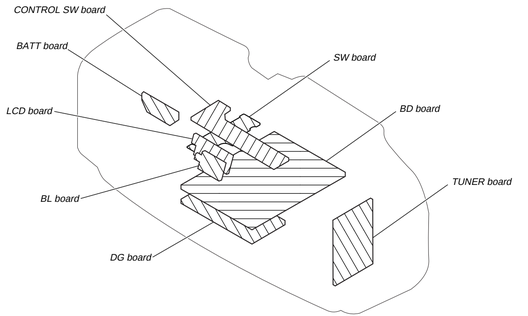

6-4. PRINTED WIRING BOARDS – MAIN SECTION – • Refer to page 42 for Circuit Boards Location.

• **Semiconductor Location**

Ref. No.	Location	Ref. No.	Location
D308	D-2	Q203	D-17
D309	D-2	Q204	D-18
D401	G-12		
D402	F-14	Q206	C-7
D405	H-6	Q207	B-24
		Q301	B-17
D406	H-6	Q302	E-16
D407	G-17	Q303	E-17
D701	C-18		
D702	C-19	Q304	B-17
D703	B-13	Q305	D-14
		Q306	D-15
D704	B-12	Q311	C-25
D761	H-2	Q312	C-24
D762	H-2		
		Q401	E-7
		Q402	F-14
IC301	D-7	Q403	F-17
IC302	C-14	Q404	H-24
IC401	G-14	Q405	H-7
IC402	G-12		
IC403	H-12	Q406	F-22
		Q407	G-19
IC404	F-12	Q408	F-17
IC405	F-21	Q409	F-17
IC701	D-21	Q410	H-7
IC702	D-19		
IC703	C-8	Q411	H-24
		Q412	G-19
IC711	H-2	Q413	B-7
		Q701	C-11
		Q702	C-13
Q101	B-18		
Q102	E-17	Q703	B-12
Q103	D-17	Q761	J-3
Q104	C-18	Q762	J-3
Q106	C-6	Q763	H-3
		Q764	J-2
Q107	B-24		
Q201	B-18	Q765	J-3
Q202	D-17	Q766	G-3

Note:
- ◇—— : parts extracted from the component side.
- ○ : Through hole.
- ▒▒▒ : Pattern from the side which enables seeing.

(The other layers' patterns are not indicated.)

Caution:	
Pattern face side: (Side B)	Parts on the pattern face side seen from the pattern face are indicated.
Parts face side: (Side A)	Parts on the parts face side seen from the parts face are indicated.

【CD MOTOR BOARD】

【LINE BOARD】

【MOTOR BOARD】

【MAIN BOARD】 (SIDE B)

【MAIN BOARD】 (SIDE A)

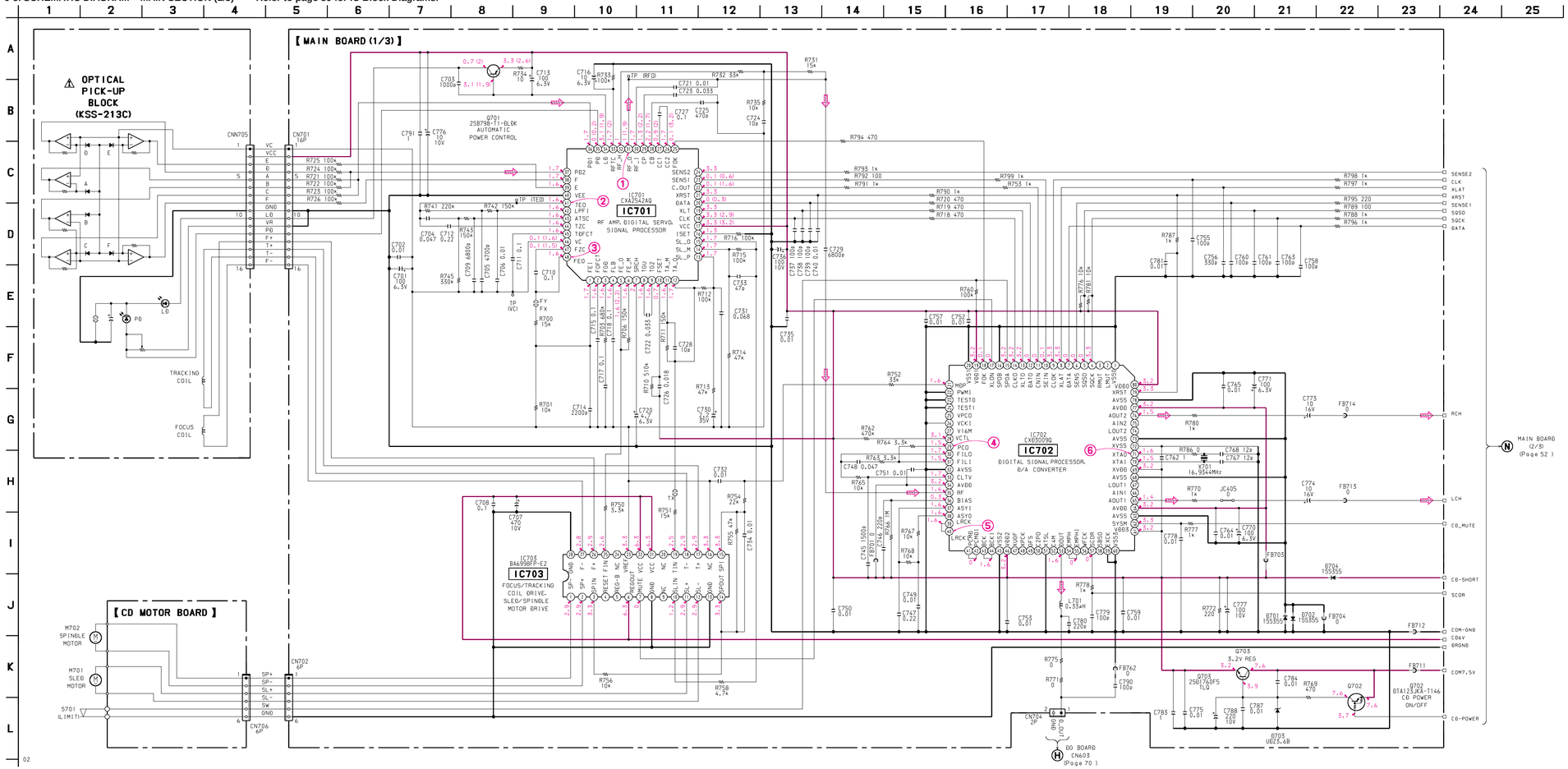
【MAIN BOARD (1/3)】
OPTICAL PICK-UP BLOCK (KSS-213C)
【CD MOTOR BOARD】
IC701 CXA2542AQ RF AMP, DIGITAL SERVO, SIGNAL PROCESSOR
IC702 CXD3029Q DIGITAL SIGNAL PROCESSOR, D/A CONVERTER
IC703 BA6598FP-E2 FOCUS/TRACKING COIL DRIVE, SLED/SPINDLE MOTOR DRIVE
Q701 2SB798-T1-DLBK AUTOMATIC POWER CONTROL
Q703 2SD1760FS 3.2V REG
Q702 DTA123JKA-T146 CD POWER ON/OFF
Q705 UDZS-6B
CN705 16P
CN701 16P
CN702 6P
CN796 6P
CN704 2P
CN603 (Page 70)
MAIN BOARD (2/3) (Page 52)
TRACKING COIL
FOCUS COIL
M702 SPINDLE MOTOR
M701 SLED MOTOR
S701 (LIMIT)
TP (RFO)
TP (TED)
TP (VC)
TP (FEO)
TP (FE)
TP (TE)
TP (SE)
TP (CE)
TP (FOK)
TP (SBAD)
TP (GFS)
TP (SCOR)
TP (SPDL)
TP (SLDL)
TP (SLDH)
TP (SPDH)
TP (SLDH)
TP (SPDH)
TP (SLDH)
TP (SPDH

6-6. SCHEMATIC DIAGRAM – MAIN SECTION (2/3) – ● Refer to page 89 for IC Block Diagrams.

● Waveforms – Main Section (2/3) –

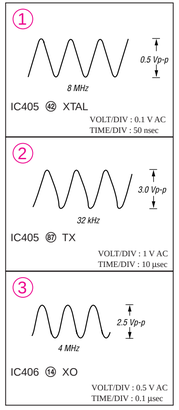

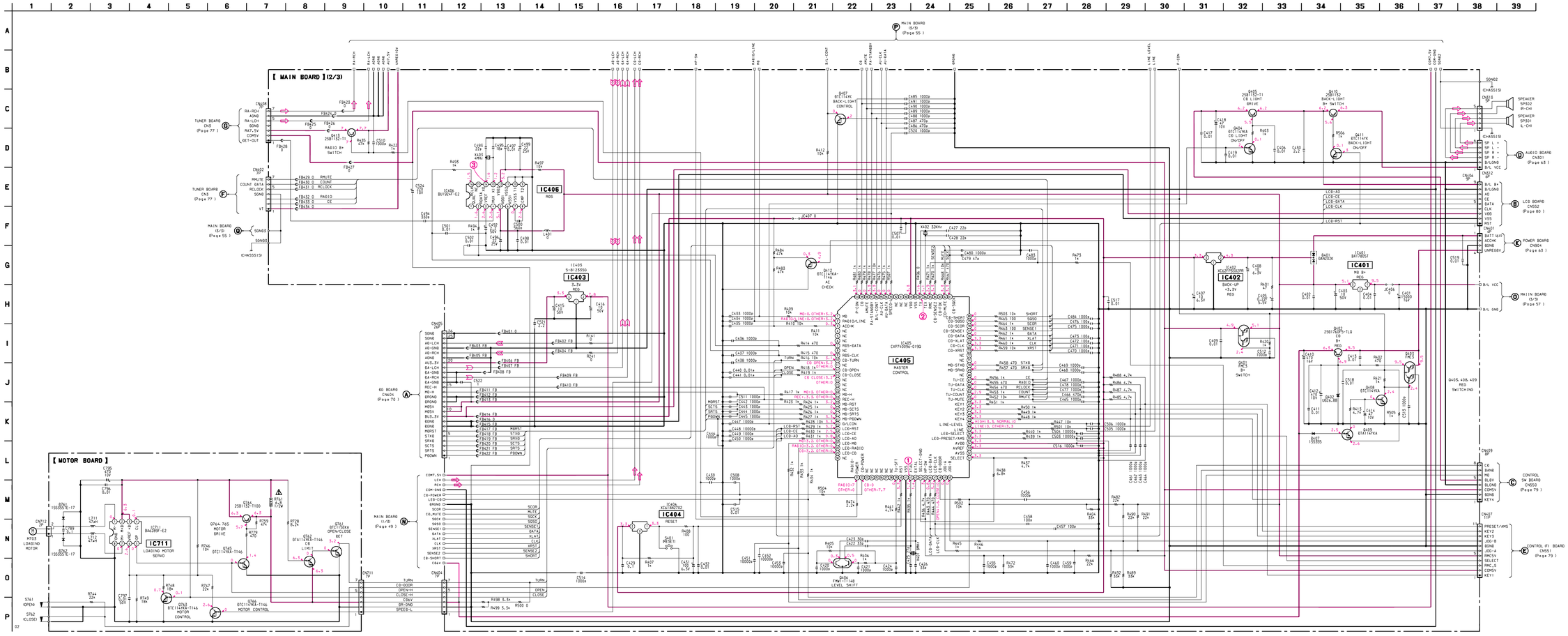

Note:
- All capacitors are in μF unless otherwise noted. pF: μμF 50 WV or less are not indicated except for electrolytics and tantalums.
- All resistors are in Ω and ¼ W or less unless otherwise specified.
- ⊣⊢ : fusible resistor.

Note: The components identified by mark ⚠ or dotted line with mark ⚠ are critical for safety. Replace only with part number specified.

- ▬▬ : B+ Line.
- Voltages and waveforms are dc with respect to ground under no-signal conditions.
  no mark : FM
- Voltages are taken with a VOM (Input impedance 10 MΩ). Voltage variations may be noted due to normal production tolerances.
- Waveforms are taken with a oscilloscope. Voltage variations may be noted due to normal production tolerances.
- Circled numbers refer to waveforms.
- Signal path.
  ⇨ : FM
  ⇨ : MD PLAY
  ⇨ : MD REC
  ⇨ : CD

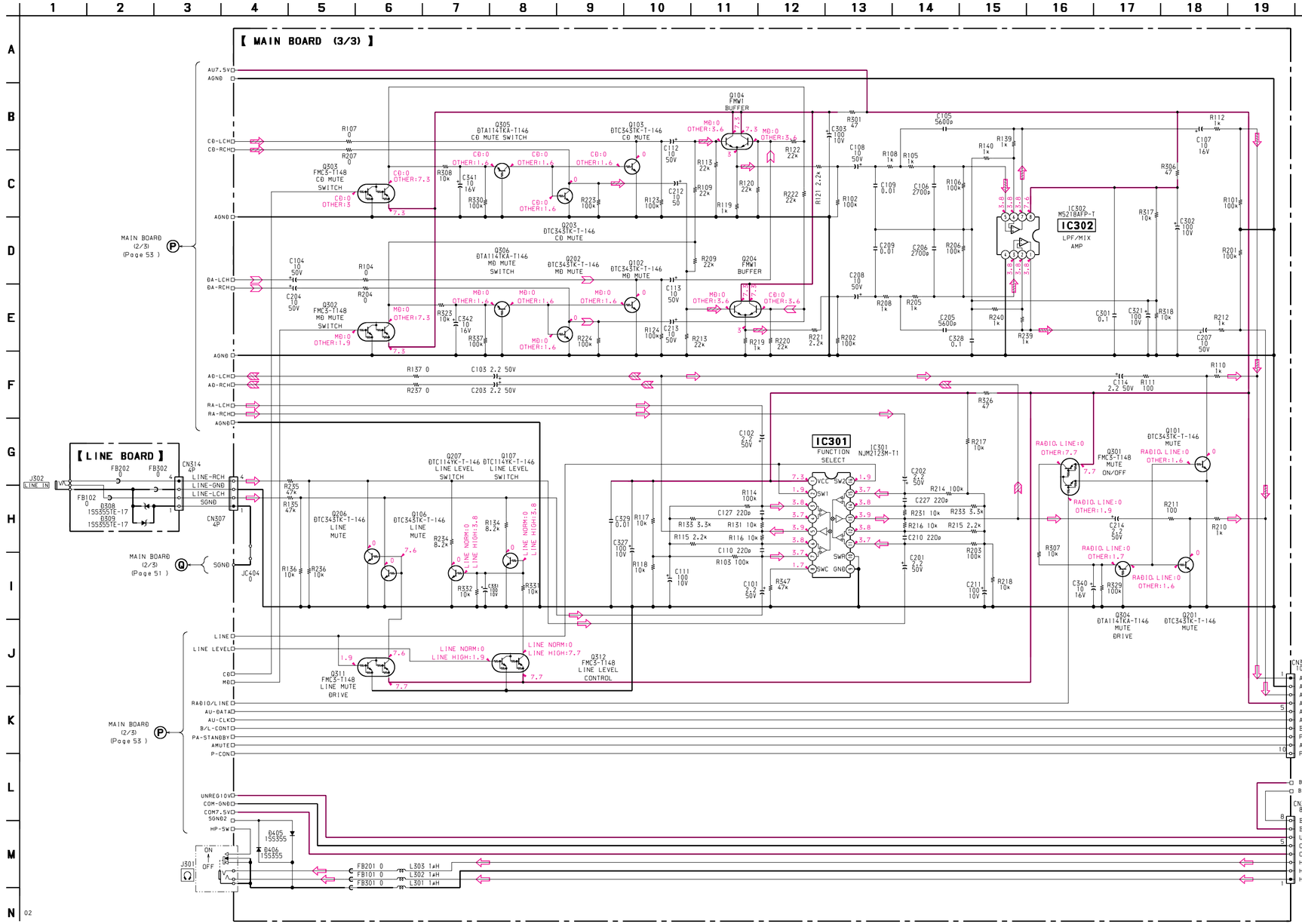

Note:

- All capacitors are in µF unless otherwise noted. pF: µµF 50 WV or less are not indicated except for electrolytics and tantalums.
- All resistors are in Ω and 1/4 W or less unless otherwise specified.
- ▬▬ : B+ Line.
- Voltages are dc with respect to ground under no-signal conditions.
  no mark : FM
- Voltages are taken with a VOM (Input impedance 10 MΩ). Voltage variations may be noted due to normal production tolerances.
- Signal path.
  ⇨ : FM
  ⇨ : MD PLAY
  ⇨ : MD REC
  ⇨ : CD

6-8. PRINTED WIRING BOARDS – AUDIO SECTION – • Refer to page 42 for Circuit Boards Location.

• **Semiconductor Location**

Ref. No.	Location
D301	I-12
D302	E-15
D303	E-14
D304	H-10
D306	G-10
D307	I-12
D901	H-2
D903	H-5
D904	H-5
D905	I-1
D906	I-2
D907	I-3
D908	I-2
IC305	E-9
IC307	I-10
IC309	H-13
IC311	H-11
IC312	H-14
Q101	I-12
Q104	H-10
Q105	G-13
Q201	I-12
Q204	H-10
Q205	G-12
Q301	G-12
Q304	F-8
Q305	H-12
Q306	D-14
Q307	G-9
Q308	G-10
Q309	G-11
Q310	H-9
Q313	G-12
Q314	E-15

Note:
• ○—— : parts extracted from the component side.
• ▒▒▒ : Pattern from the side which enables seeing.
(The other layers' patterns are not indicated.)

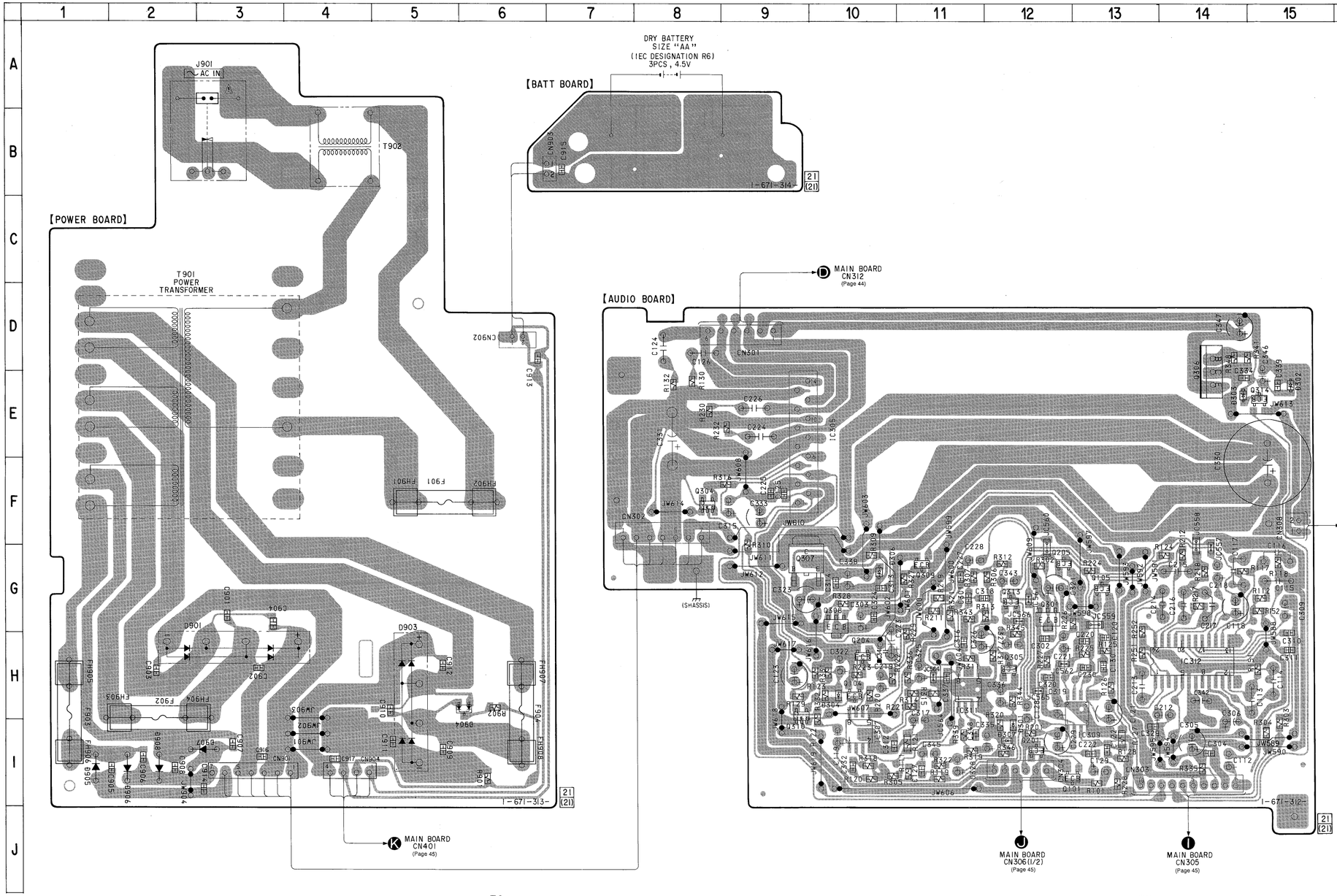

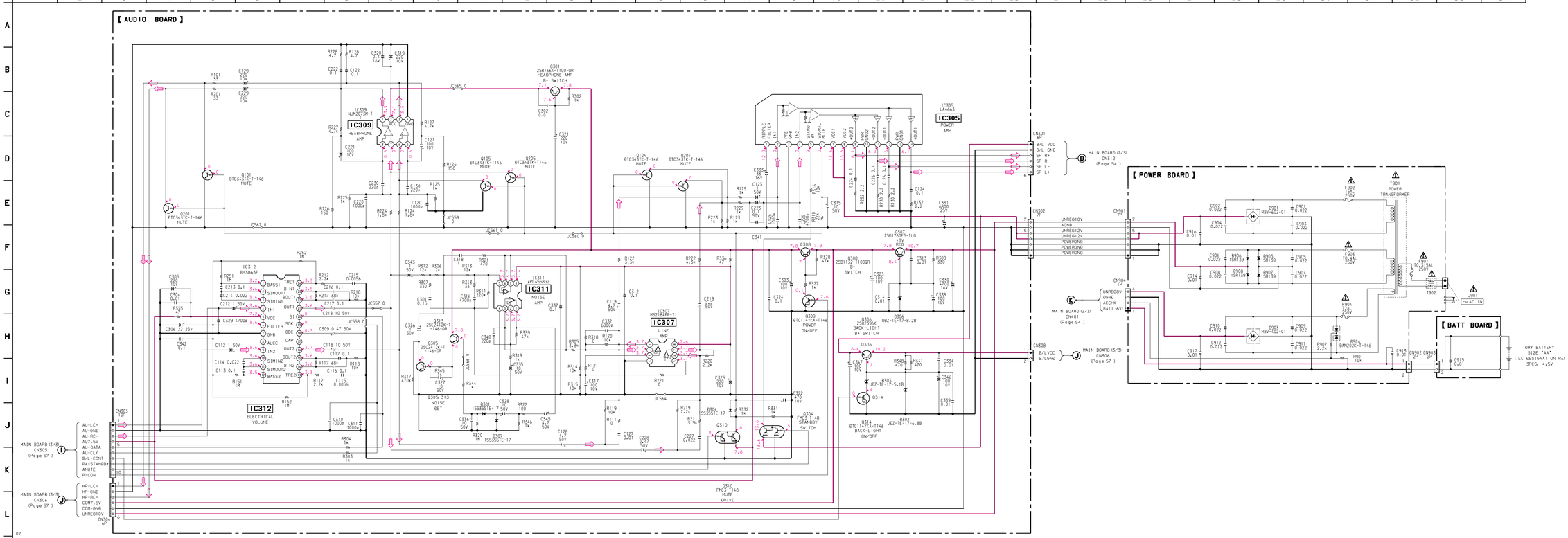

Note:

- All capacitors are in µF unless otherwise noted. pF: µµF
  50 WV or less are not indicated except for electrolytics and tantalums.
- All resistors are in Ω and 1/4 W or less unless otherwise specified.

Note: The components identified by mark ⚠ or dotted line with mark ⚠ are critical for safety.
Replace only with part number specified.

- ▬▬ : B+ Line.
- Voltages are dc with respect to ground under no-signal conditions.
  no mark : FM
- Voltages are taken with a VOM (Input impedance 10 MΩ).
  Voltage variations may be noted due to normal production tolerances.
- Signal path.
  ⇨ : FM

6-10. SCHEMATIC DIAGRAM – DG SECTION – ● Refer to page 93 for IC Block Diagram.

● Waveforms – DG Section –

① IC601 ㉗ XOUT
12 MHz, 0.63 Vp-p
VOLT/DIV : 0.2 V AC
TIME/DIV : 20 nsec

② IC601 ㉘ XOUT-T
32.768 kHz, 0.4 Vp-p
VOLT/DIV : 0.1 V AC
TIME/DIV : 10 μsec

③ IC605 ①
22.5 MHz, 0.6 Vp-p
VOLT/DIV : 0.2 V AC
TIME/DIV : 20 nsec

Note:

- All capacitors are in μF unless otherwise noted. pF: μμF 50 WV or less are not indicated except for electrolytics and tantalums.
- All resistors are in Ω and 1/4 W or less unless otherwise specified.
- △ : internal component.
- ▬▬ : B+ Line.
- Voltages and waveforms are dc with respect to ground under no-signal conditions. no mark : MD STOP
- Voltages are taken with a VOM (Input impedance 10 MΩ). Voltage variations may be noted due to normal production tolerances.
- Waveforms are taken with a oscilloscope.
- Circled numbers refer to waveforms.
- Signal path.
  ▷ : MD PLAY
  ▷ : MD REC
  ⇨ : CD

【DG BOARD】 (SIDE A)

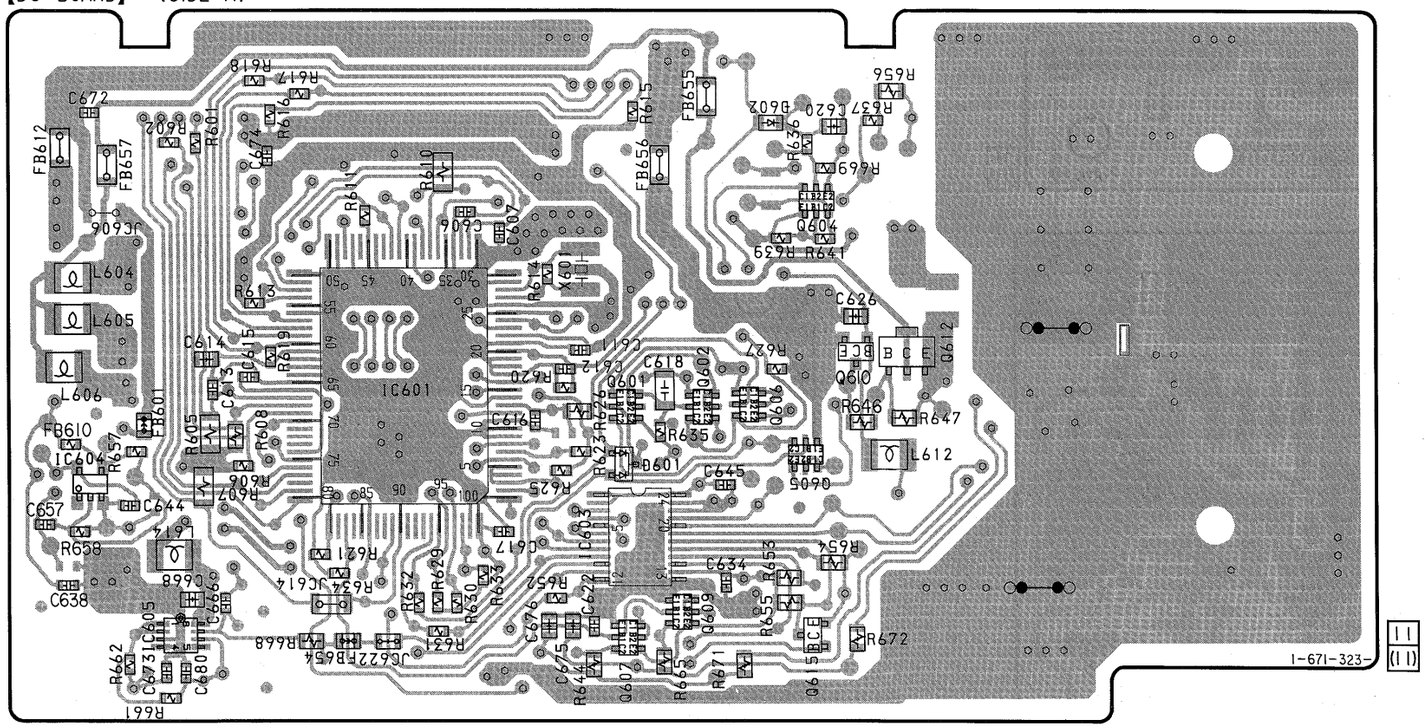

【DG BOARD】 (SIDE B)

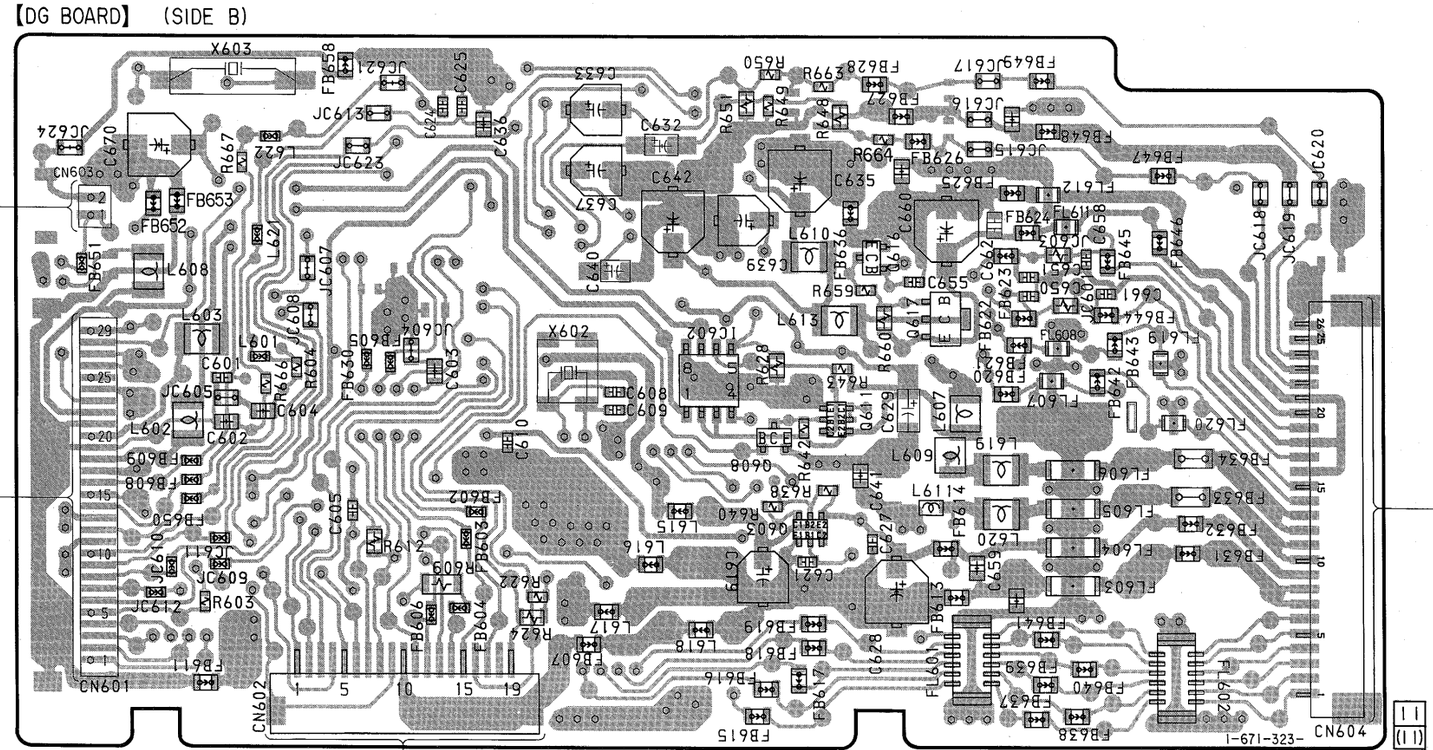

02

• **Semiconductor Location**

Ref. No.	Location
D601	C-5
D602	A-6
IC601	C-4
IC602	G-5
IC603	D-5
IC604	C-2
IC605	D-2
Q601	C-5
Q602	C-5
Q603	H-6
Q604	B-6
Q605	C-6
Q606	C-5
Q607	D-5
Q608	G-5
Q609	D-5
Q610	C-6
Q611	G-6
Q612	C-6
Q615	D-6
Q616	F-6
Q617	G-6

Note:
- ○—— : parts extracted from the component side.
- ○ : Through hole.
- ▒▒ : Pattern from the side which enables seeing.

(The other layers' patterns are not indicated.)

Caution:	
Pattern face side: (Side B)	Parts on the pattern face side seen from the pattern face are indicated.
Parts face side: (Side A)	Parts on the parts face side seen from the parts face are indicated.

6-12. PRINTED WIRING BOARDS – TUNER SECTION – ● Refer to page 42 for Circuit Boards Location.

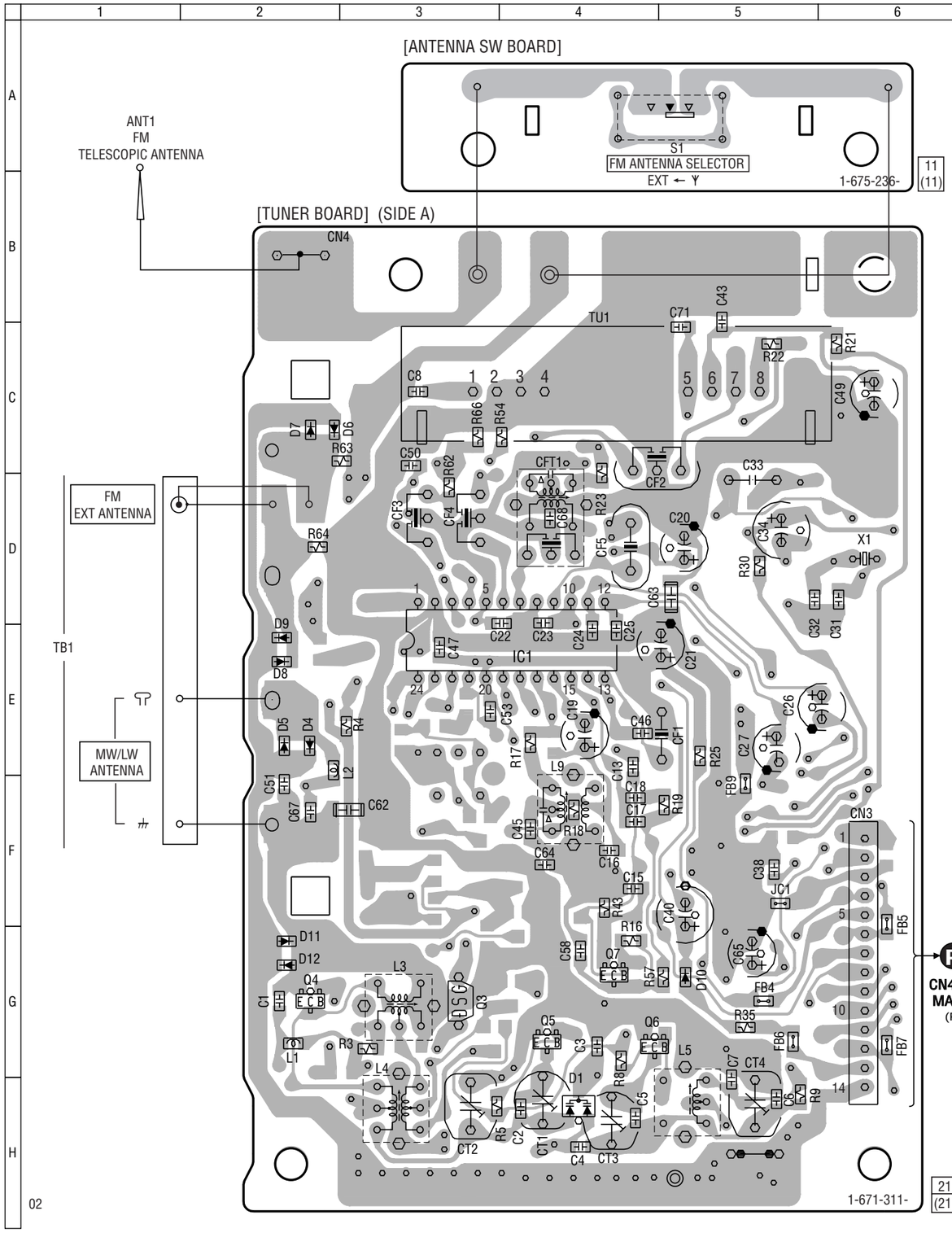

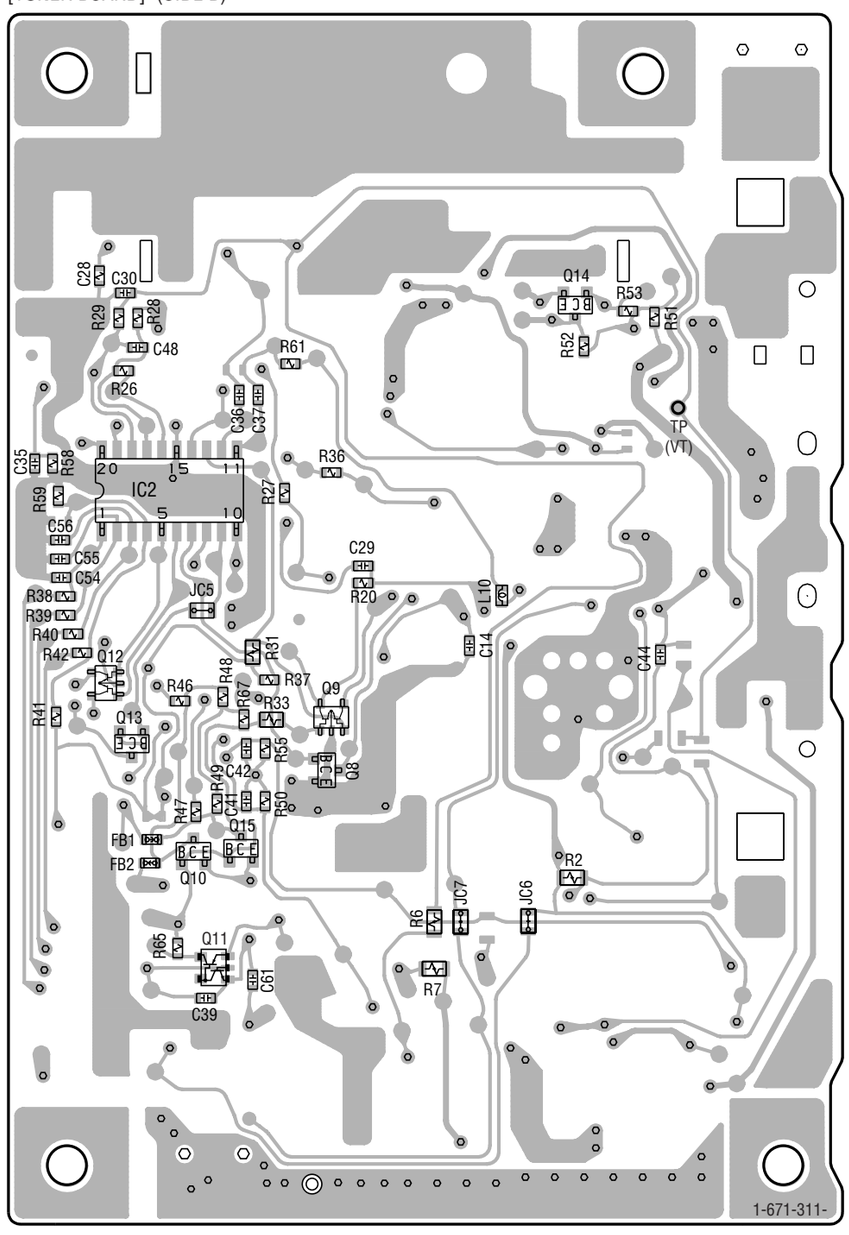

● **Semiconductor Location**

Ref. No.	Location
D1	H-4
D4	E-2
D5	E-2
D6	C-2
D7	C-2
D8	E-2
D9	E-2
D10	G-5
D11	G-2
D12	G-2
IC1	E-4
IC2	D-8
Q3	G-3
Q4	G-2
Q5	G-4
Q6	G-4
Q7	G-4
Q8	F-9
Q9	F-9
Q10	F-8
Q11	G-8
Q12	E-8
Q13	F-8
Q14	C-10
Q15	F-8

Note:
- ○——— : parts extracted from the component side.
- ○ : Through hole.
- ▒▒▒ : Pattern from the side which enables seeing.

(The other layers' patterns are not indicated.)

Caution:	
Pattern face side: (Side B)	Parts on the pattern face side seen from the pattern face are indicated.
Parts face side: (Side A)	Parts on the parts face side seen from the parts face are indicated.

6-13. SCHEMATIC DIAGRAM – TUNER SECTION – ● Refer to page 94 for IC Block Diagrams.

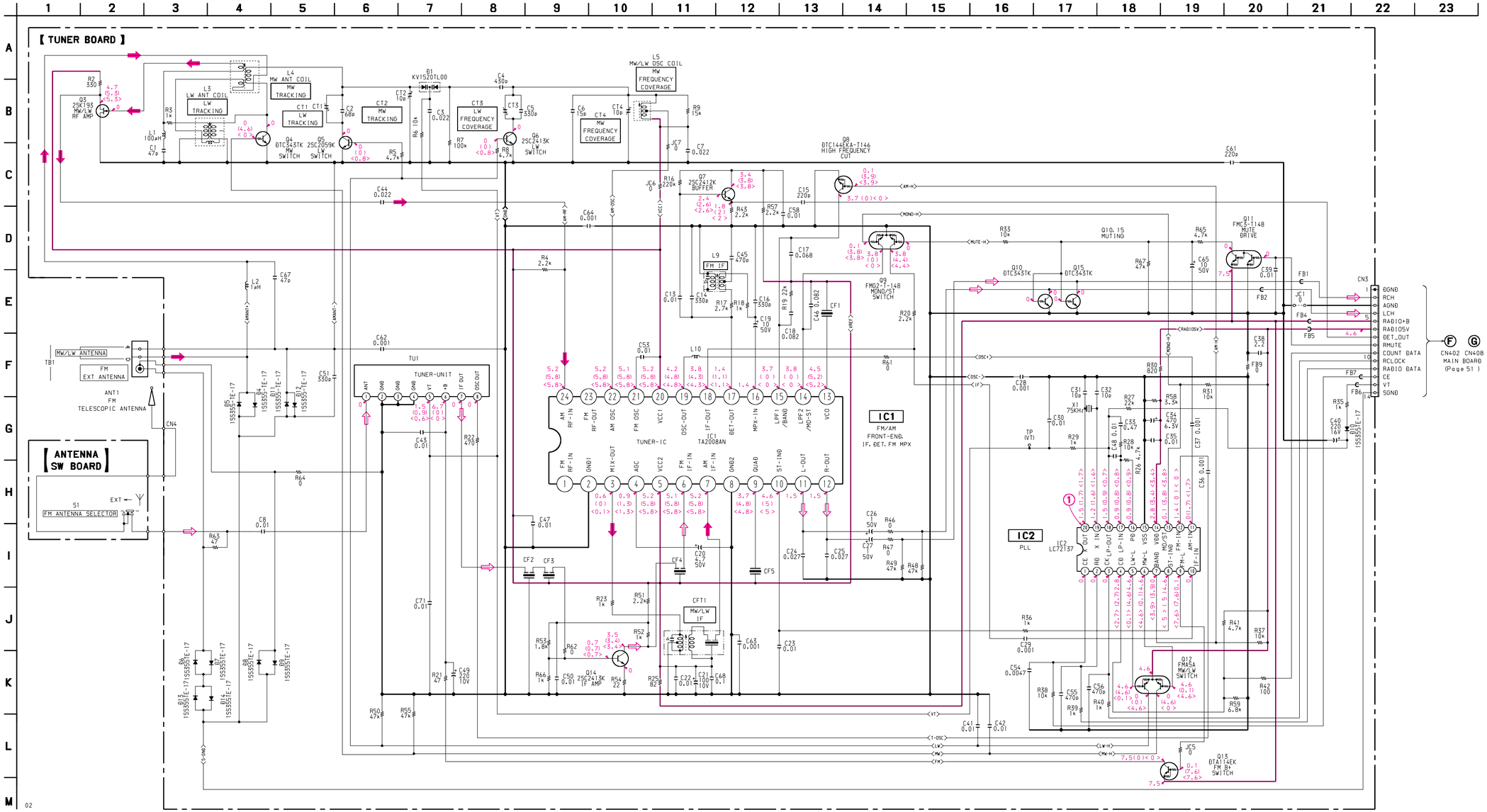

● Waveform – Tuner Section –

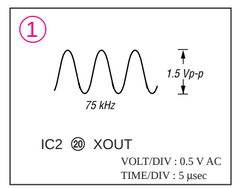

Note:

- All capacitors are in µF unless otherwise noted. pF: µµF 50 WV or less are not indicated except for electrolytics and tantalums.
- All resistors are in Ω and 1/4 W or less unless otherwise specified.
- △ : internal component.
- ▬▬ : B+ Line.
- ▭ : adjustment for repair.
- Voltages and waveforms are dc with respect to ground under no-signal (detuned) conditions.
  no mark : FM
  ( ) : MW
  < > : LW
- Voltages are taken with a VOM (Input impedance 10 MΩ). Voltage variations may be noted due to normal production tolerances.
- Waveforms are taken with a oscilloscope.
- Circled numbers refer to waveforms.
- Signal path.
  ⇨ : FM
  ➡ : MW/LW

6-14. SCHEMATIC DIAGRAM – CONTROL SECTION –

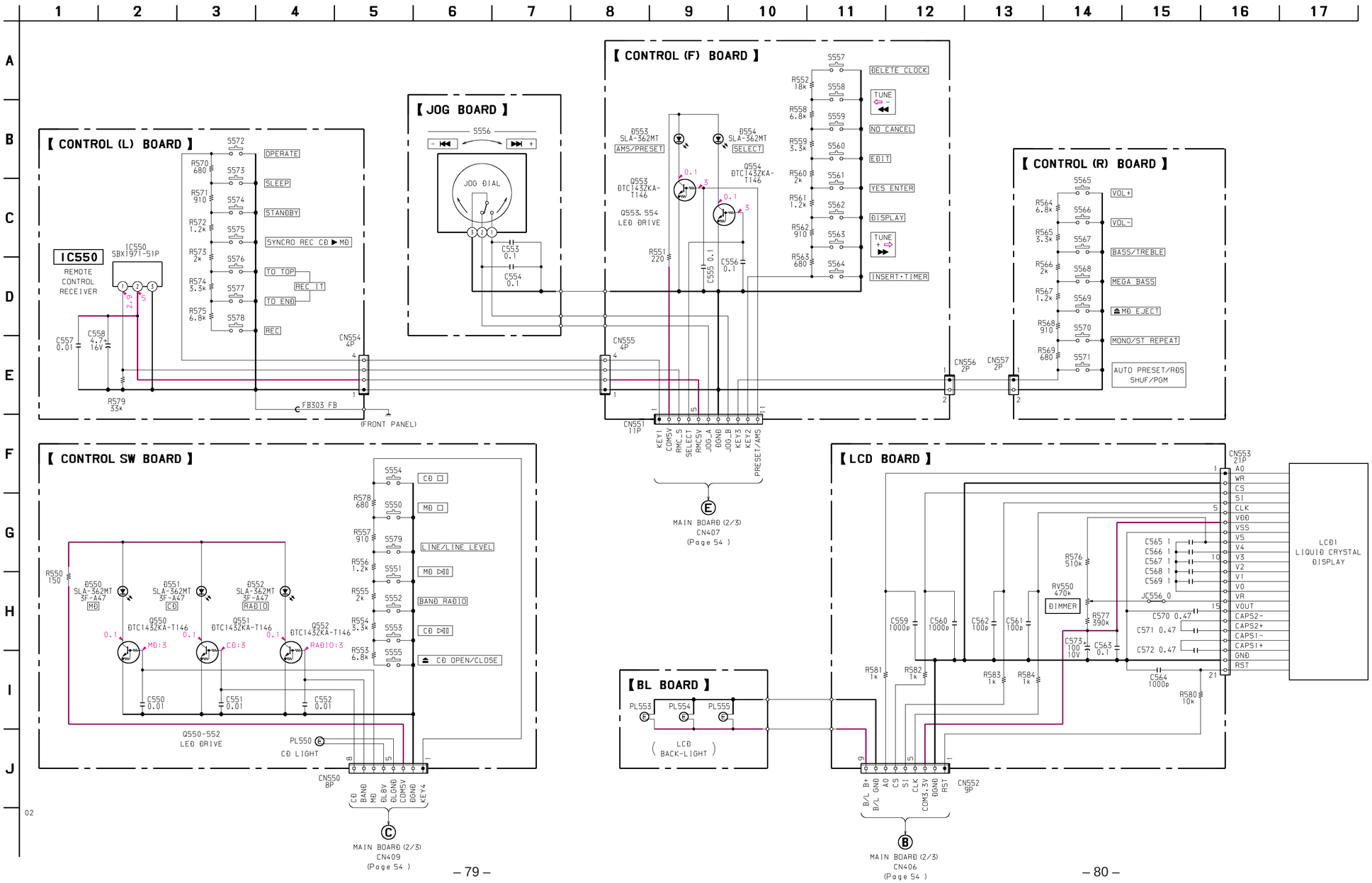

Note:

- All capacitors are in µF unless otherwise noted. pF: µµF 50 WV or less are not indicated except for electrolytics and tantalums.
- All resistors are in Ω and ¼ W or less unless otherwise specified.
- ▬ : B+ Line.
- ▭ : adjustment for repair.
- Voltages are dc with respect to ground under no-signal conditions.
  no mark : FM
- Voltages are taken with a VOM (Input impedance 10 MΩ). Voltage variations may be noted due to normal production tolerances.

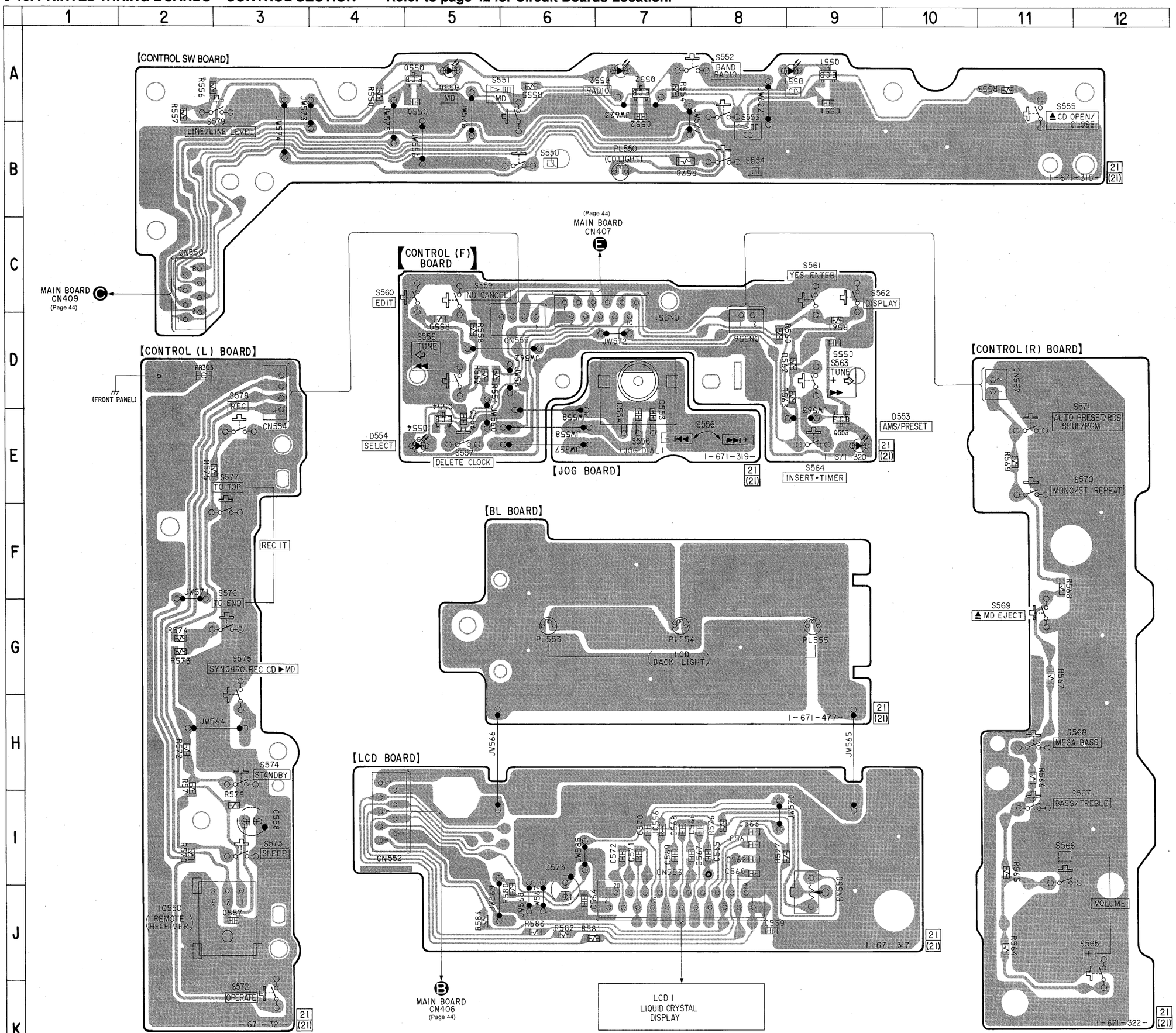

- **Semiconductor Location**

Ref. No.	Location
D550	A-5
D551	A-9
D552	A-7
D553	E-9
D554	E-5
IC550	J-3
Q550	A-5
Q551	A-9
Q552	A-7
Q553	E-9
Q554	E-5

Note:
- ○—— : parts extracted from the component side.
- ▒▒▒ : Pattern from the side which enables seeing.

(The other layers' patterns are not indicated.)

5-16. PRINTED WIRING BOARDS – BD SECTION – • Refer to page 42 for Circuit Boards Location.

【BD BOARD】 (SIDE A)

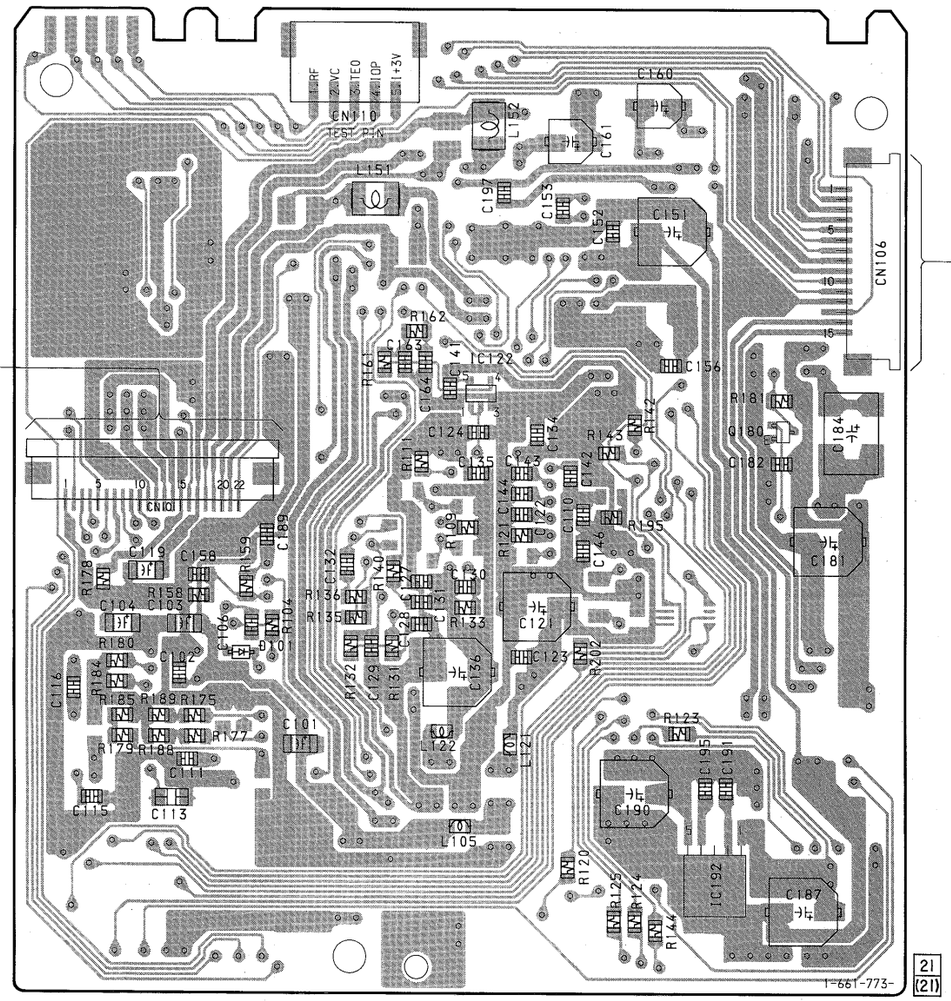

【BD BOARD】 (SIDE B)

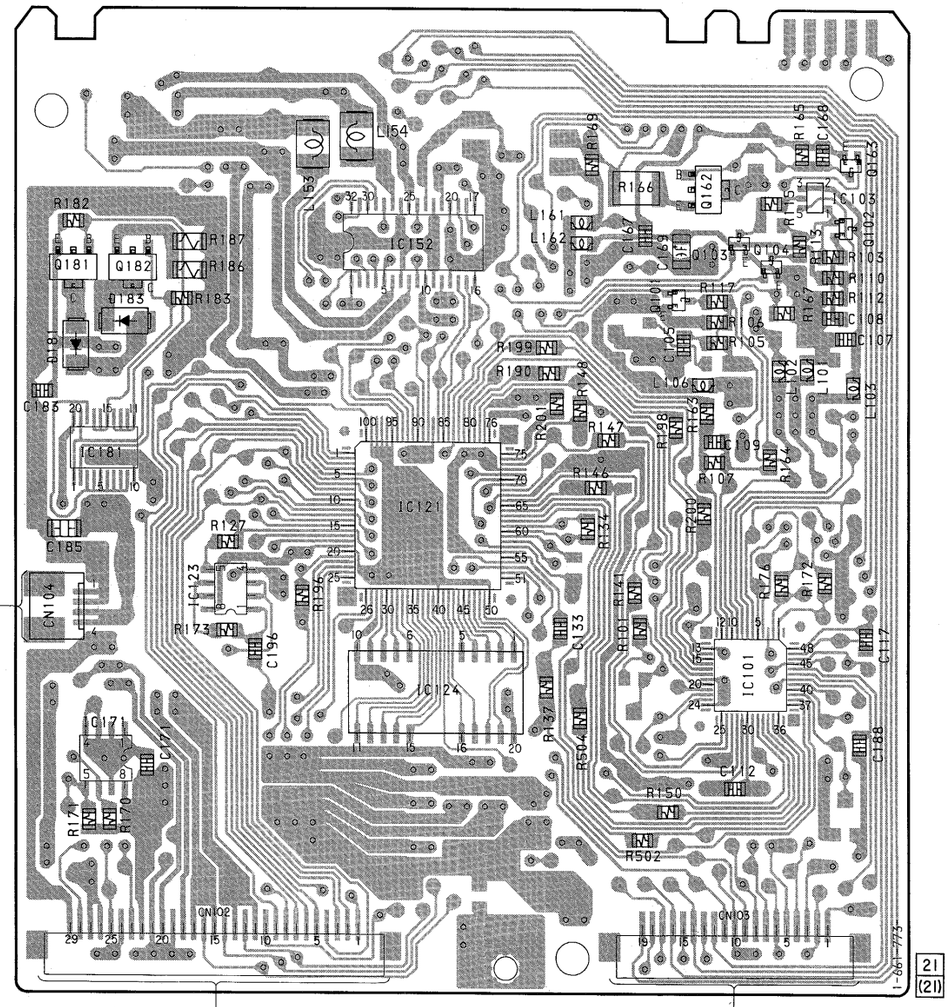

OPTICAL PICK-UP BLOCK
(KMS-260A)

HR901
OVER WRITE HEAD

DG BOARD
CN601
(Page 71)

DG BOARD
CN602
(Page 71)

【SW BOARD】 (SIDE A)

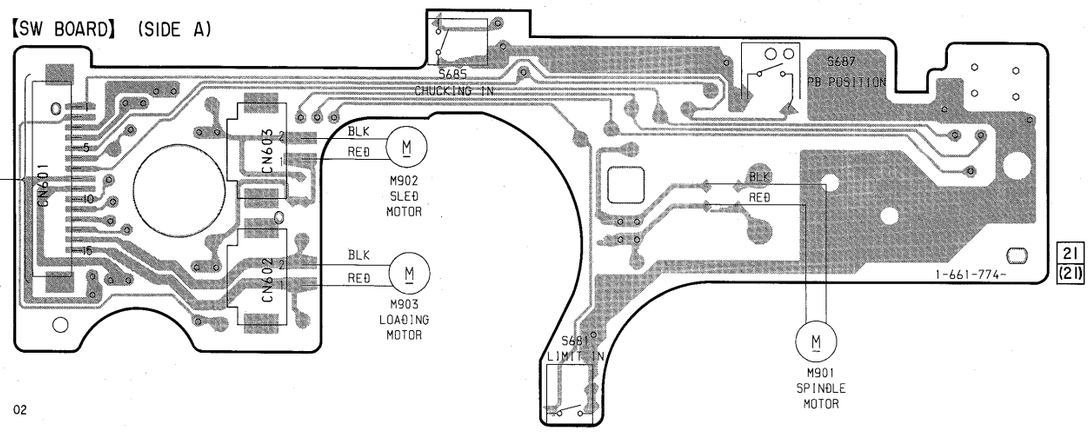

【SW BOARD】 (SIDE B)

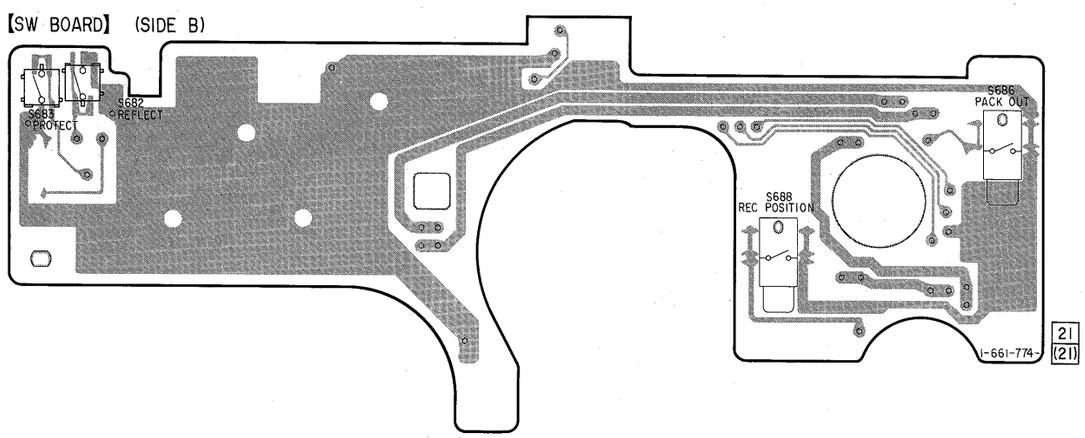

● **Semiconductor Location**

Ref. No.	Location
D101	E-4
D181	C-9
D183	C-9
IC101	E-13
IC103	B-13
IC121	D-11
IC122	C-5
IC123	D-10
IC124	E-11
IC152	B-11
IC171	E-9
IC181	D-9
IC192	F-7
Q101	C-13
Q102	B-14
Q103	B-13
Q104	C-13
Q162	B-14
Q163	D-7
Q180	C-9
Q181	C-9
Q182	B-13

Note on Printed Wiring Boards:

Note:

- ○——○ : parts extracted from the component side.
- ○ : Through hole.
- ▒▒▒▒ : Pattern from the side which enables seeing.

(The other layers' patterns are not indicated.)

Caution:	
Pattern face side: (Side B)	Parts on the pattern face side seen from the pattern face are indicated.
Parts face side: (Side A)	Parts on the parts face side seen from the parts face are indicated.

Note on Schematic Diagram:

Note:

- All capacitors are in µF unless otherwise noted. pF: µµF 50 WV or less are not indicated except for electrolytics and tantalums.
- All resistors are in Ω and ¼ W or less unless otherwise specified.
- % : indicates tolerance.

Note: The components identified by mark ⚠ or dotted line with mark ⚠ are critical for safety.
Replace only with part number specified.

- ▬▬ : B+ Line.
- Voltages and waveforms are dc with respect to ground under no-signal conditions.
  no mark : MD STOP
  ( ) : MD PLAY
  < > : MD REC
  ✻ : Impossible to measure
- Voltages are taken with a VOM (Input impedance 10 MΩ). Voltage variations may be noted due to normal production tolerances.
- Waveforms are taken with a oscilloscope.
- Circled numbers refer to waveforms.
- Signal path.
  ▷ : MD PLAY
  ▷▷ : MD REC
  ⇨ : CD

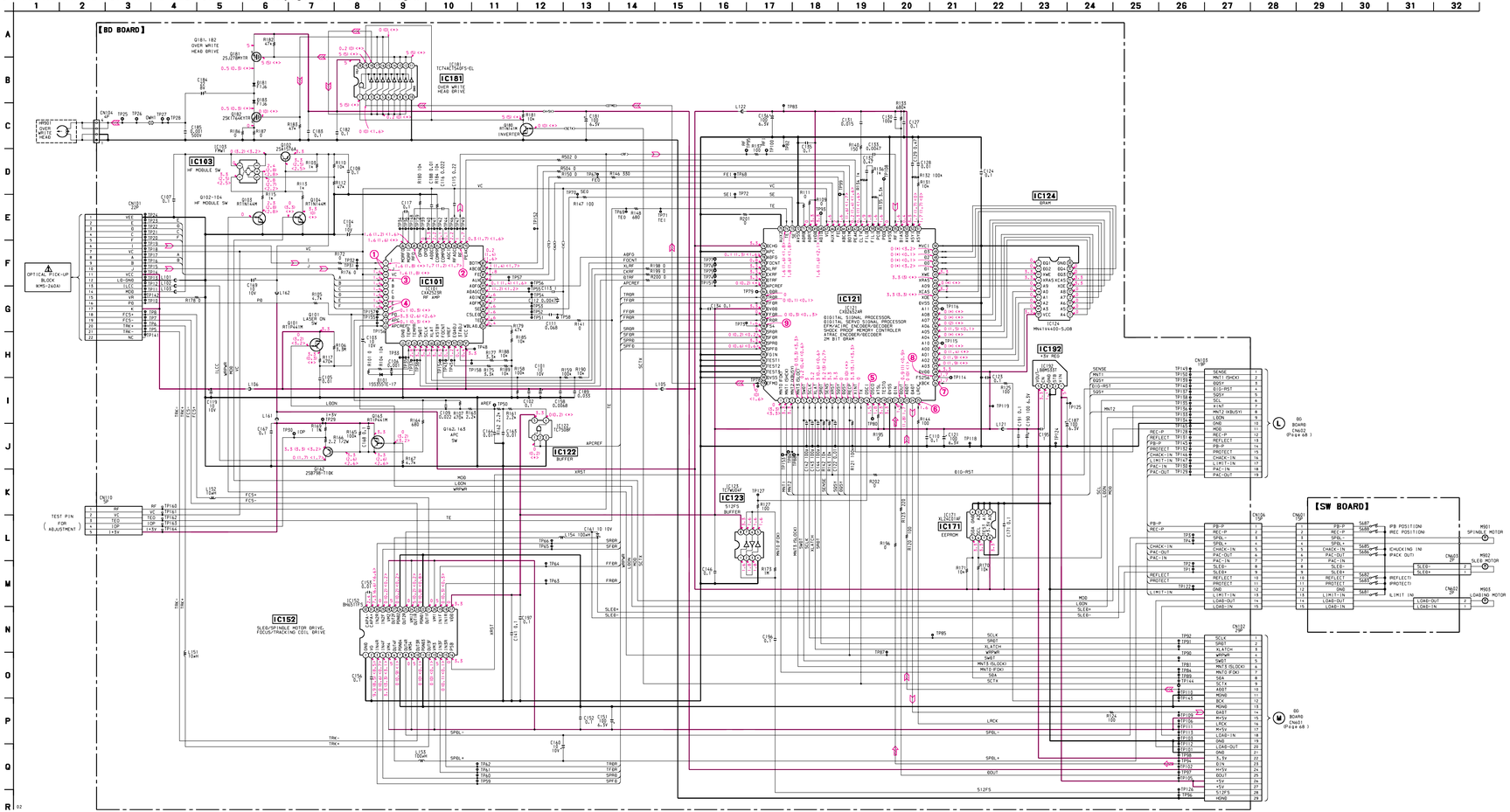

● **Waveforms – BD Section –**

① PLAY MODE
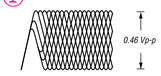
0.46 Vp-p
IC101 ①, ② I, J
VOLT/DIV : 0.2 V AC
TIME/DIV : 0.5 µsec

② PLAY MODE
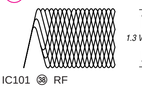
1.3 Vp-p
IC101 ㉘ RF
VOLT/DIV : 0.5 V AC
TIME/DIV : 0.5 µsec

③ PLAY MODE

0.1 Vp-p
IC101 ④ A
VOLT/DIV : 20 mV AC
TIME/DIV : 1 µsec

④ PLAY MODE

60 mVp-p
IC101 ⑧, ⑨ E, F
VOLT/DIV : 20 mV AC
TIME/DIV : 1 µsec

⑤
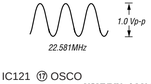
1.0 Vp-p
22.581MHz
IC121 ⑰ OSCO
VOLT/DIV : 0.2 V AC
TIME/DIV : 50 nsec

⑥
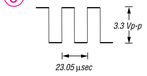
3.3 Vp-p
23.05 µsec
IC121 ㉓ LRCK
VOLT/DIV : 1 V AC
TIME/DIV : 10 µsec

⑦

3.5 Vp-p
0.36 µsec
IC121 ㉖ XBCK
VOLT/DIV : 1 V AC
TIME/DIV : 0.1 µsec

⑧
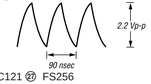
2.2 Vp-p
90 nsec
IC121 ㉗ FS256
VOLT/DIV : 0.5 V AC
TIME/DIV : 50 nsec

⑨
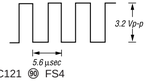
3.2 Vp-p
5.6 µsec
IC121 ㉜ FS4
VOLT/DIV : 1 V AC
TIME/DIV : 2 µsec

● IC Block Diagrams – Main Section –

IC701 CXA2542AQ

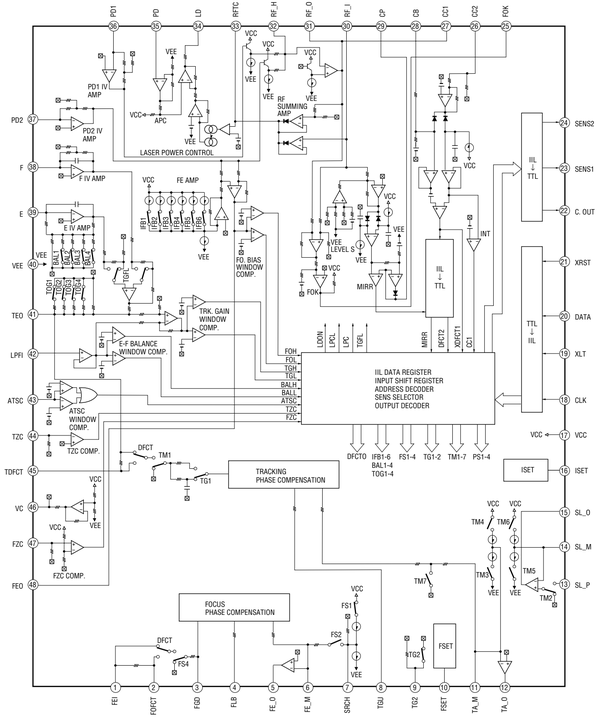

IC702 CXD3009Q

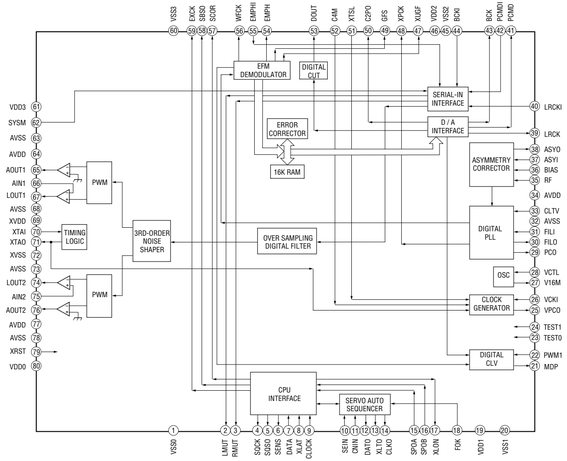

IC703 BA6898FP-E2

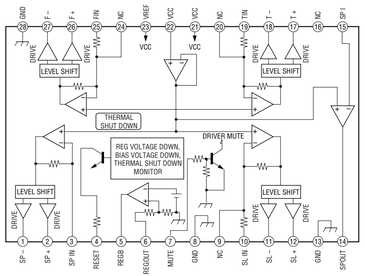

● IC Block Diagrams – BD Section –

IC101 CXD2523R

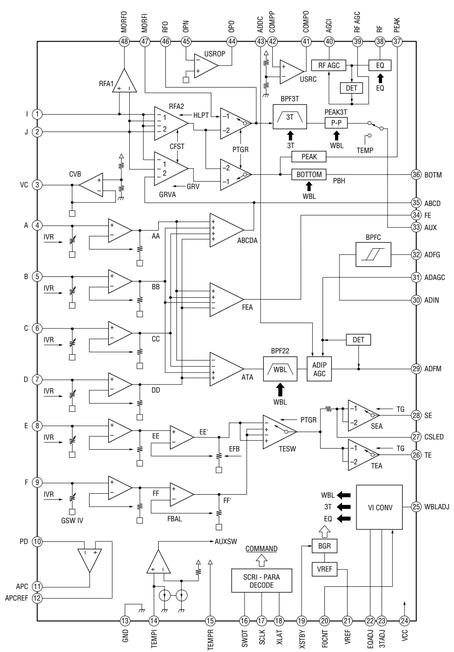

IC121 CXD2652AR

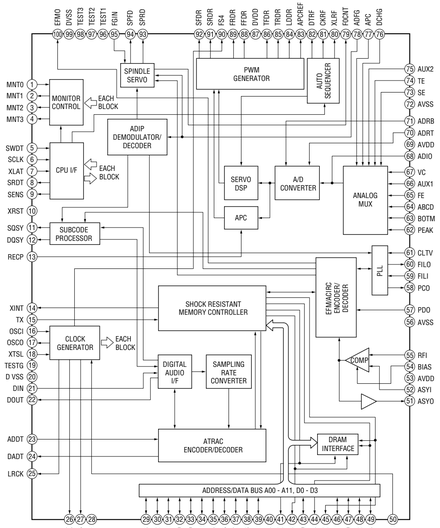

IC152 BH6511FS

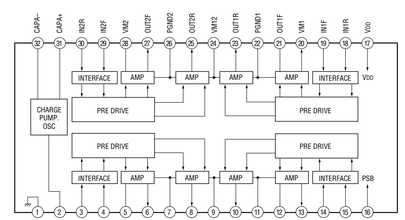

● **IC Block Diagram – Audio Section –**

IC312 BH3863F-E2

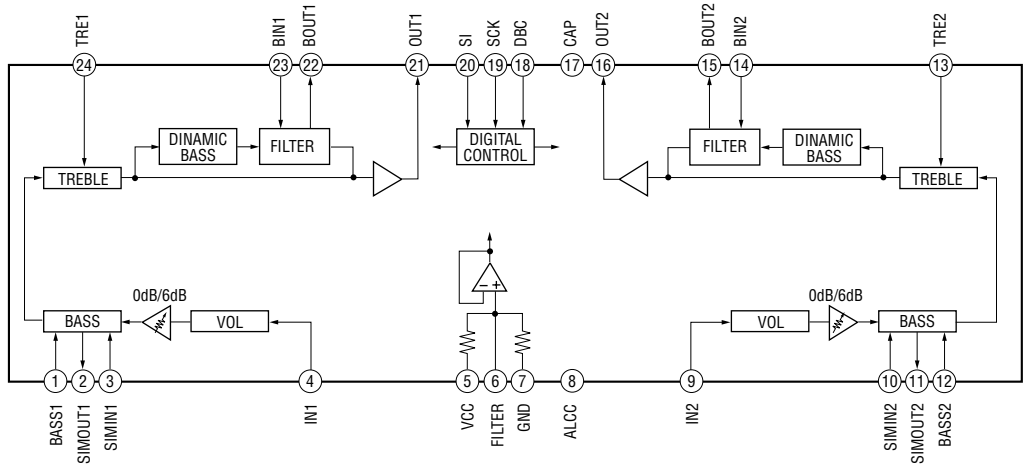

● **IC Block Diagram – DG Section –**

IC603 PCM3003E/T2

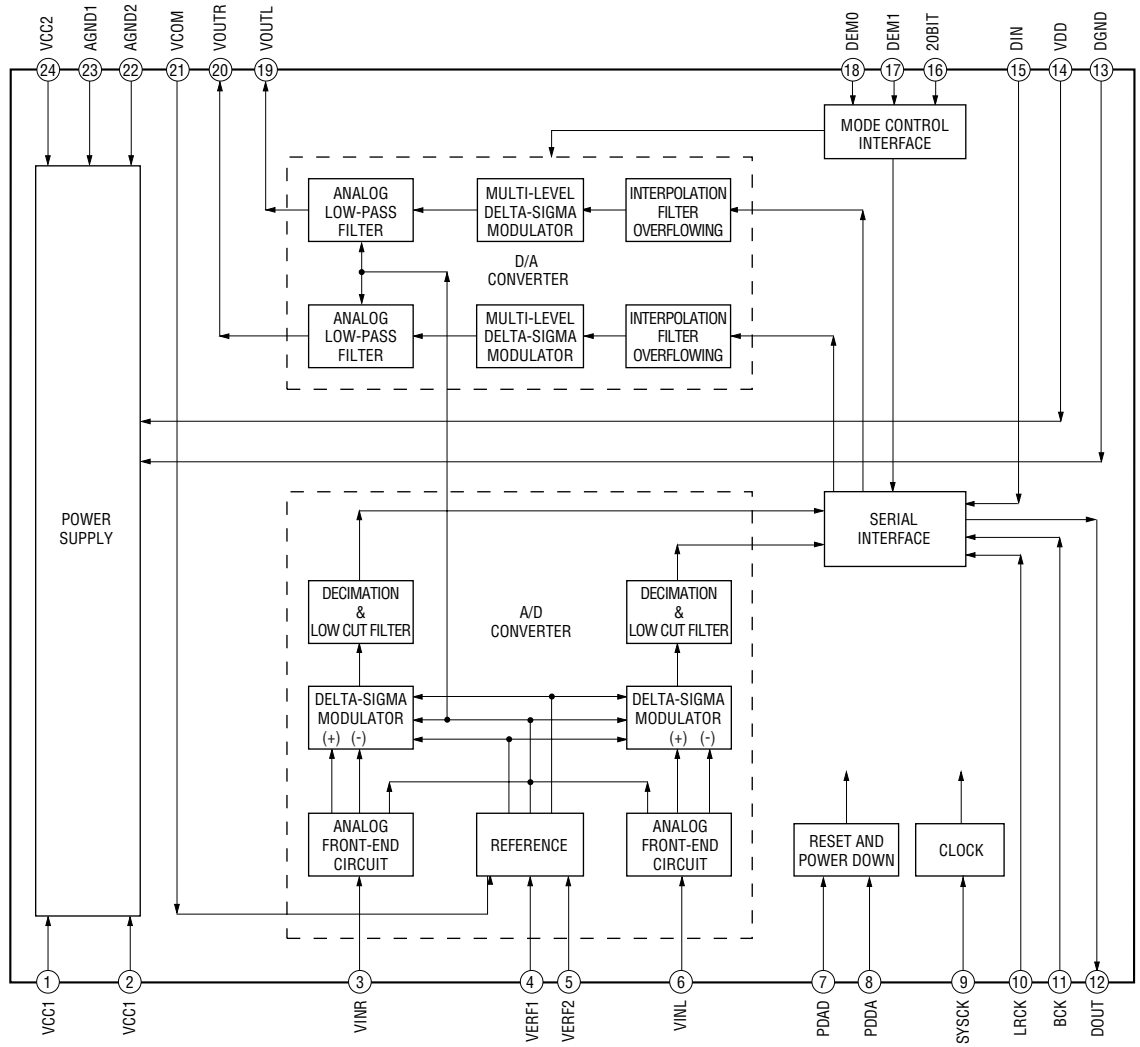

- **IC Block Diagrams – Tuner Section –**

IC1 TA2008AN

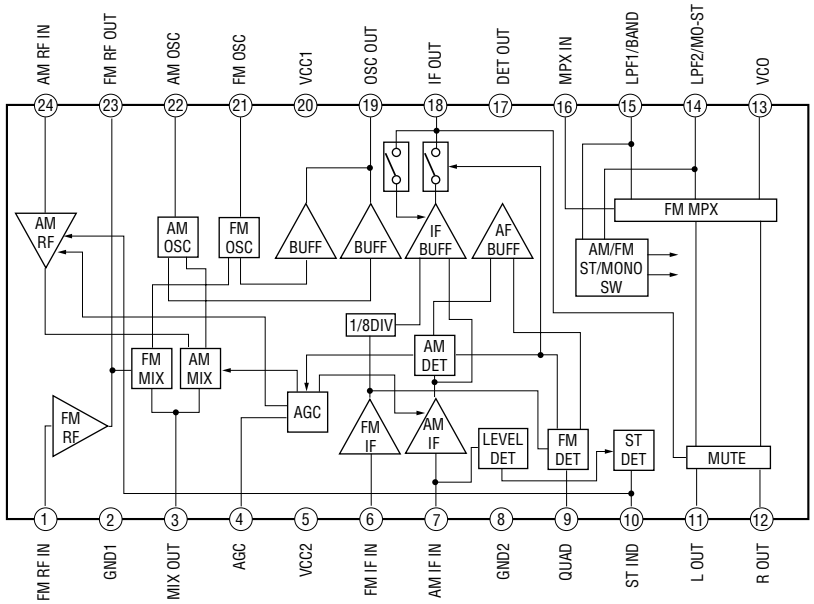

IC2 LC72137M-TLM

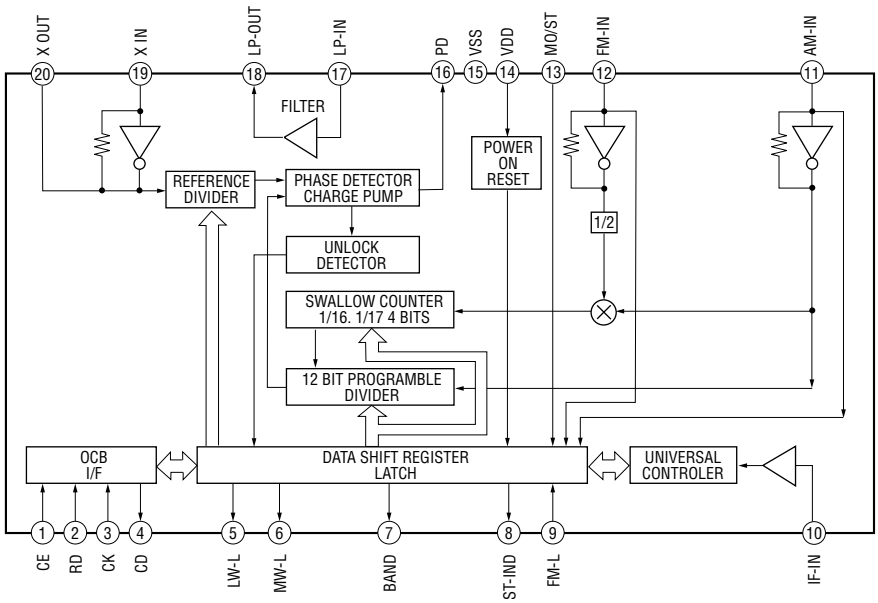

SECTION 7
EXPLODED VIEWS

NOTE :

- -XX, -X mean standardized parts, so they may have some difference from the original one.
- Color indication of Appearance Parts
  Example :
  KNOB, BALANCE (WHITE) ••• (RED)
  ↑ ↑
  Parts color Cabinet's color
- Items marked " * "are not stocked since they are seldom required for routine service. Some delay should be anticipated when ordering these items.
- The mechanical parts with no reference number in the exploded views are not supplied.
- Hardware (# mark) list and accessories and packing materials are given in the last of this parts list.

The components identified by mark ⚠ or dotted line with mark ⚠ are critical for safety.
Replace only with part number specified.

7-1. REAR CABINET SECTION

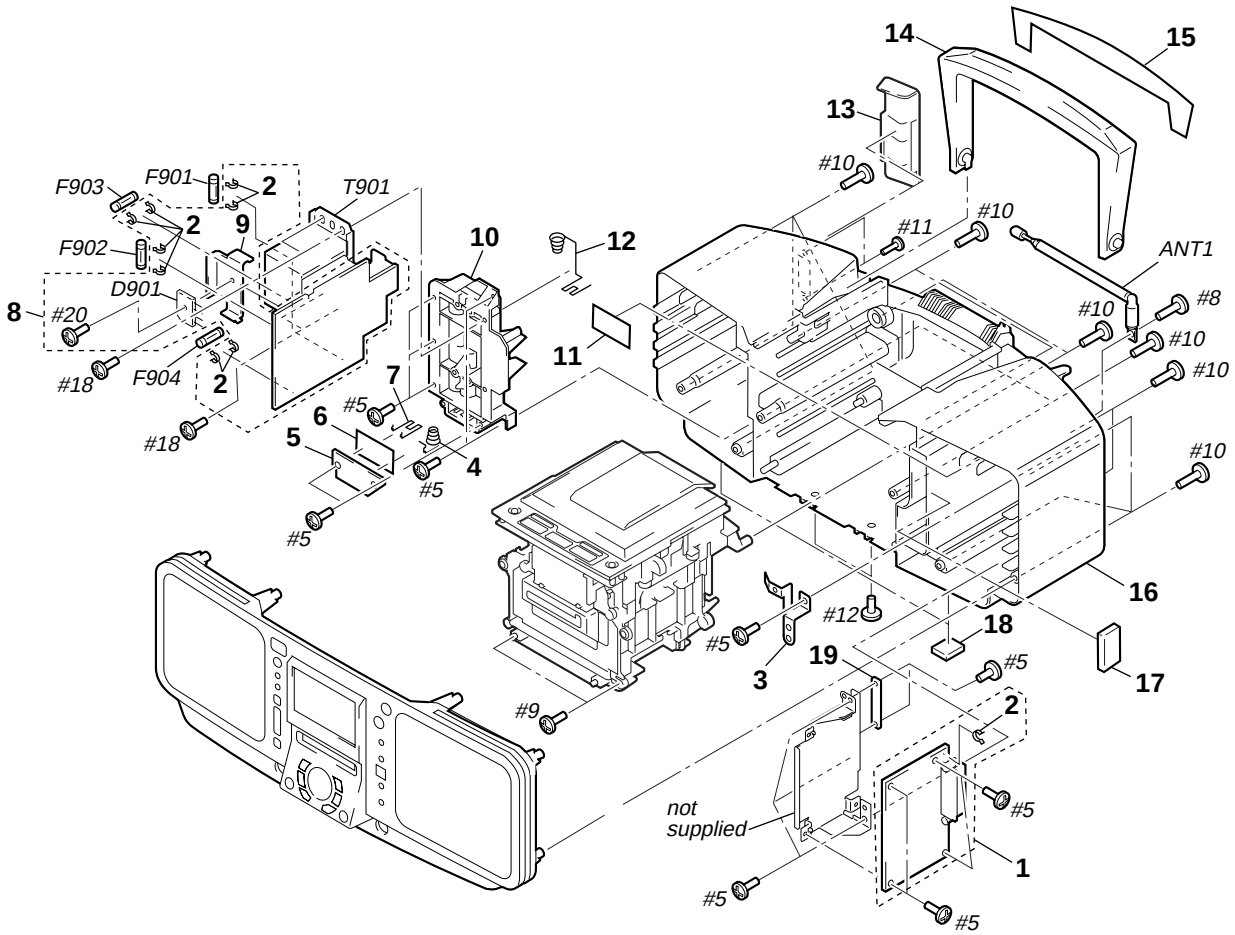

Ref. No.	Part No.	Description	Remark
* 1	A-3323-154-A	TUNER BOARD, COMPLETE	
2	1-533-217-31	HOLDER, FUSE	
3	3-027-686-01	TERMINAL BOARD, ANT	
4	3-028-895-01	TERMINAL (-), BATTERY	
* 5	1-671-314-21	BATT BOARD	
6	3-031-100-01	PACKING (BATTERY)	
7	3-028-894-01	TERMINAL (+), BATTERY	
* 8	1-671-313-21	POWER BOARD	
* 9	3-028-880-01	HEATSINK (DIODE)	
* 10	3-027-669-01	SHASSIS, TRANSFORMER	
* 11	3-378-433-01	CUSHION, SARANET	
12	3-027-681-01	TERMINAL (+/-), BATTERY	
13	3-027-673-01	LID,BATTERY CASE	
14	3-027-670-01	HANDLE	

Ref. No.	Part No.	Description	Remark
15	3-030-768-01	COVER, HANDLE	
16	X-3377-153-1	CABINET (REAR) SUB ASSY	
17	3-033-657-01	SOUND CUSHION,(1)	
18	3-029-907-01	FOOT, RUBBER	
* 19	1-675-236-11	ANTENNA SW BOARD	
ANT1	1-754-023-11	ANTENNA, TELESCOPIC	
D901	8-719-302-38	DIODE RBV-602-01	
⚠F901	1-532-235-00	FUSE (T0.315AL/250V)	
⚠F902	1-532-299-00	FUSE (T5AL/250V)	
⚠F903	1-532-066-00	FUSE (T0.4AL/250V)	
⚠F904	1-532-388-51	FUSE (T2AL/250V)	
⚠T901	1-433-781-11	TRANSFORMER, POWER	

7-2. FRONT CABINET SECTION

▲ *A : Control (R) board*
▲ *B : Control (F) board*
▲ *C : JOG board*
▲ *D : Control (L) board*

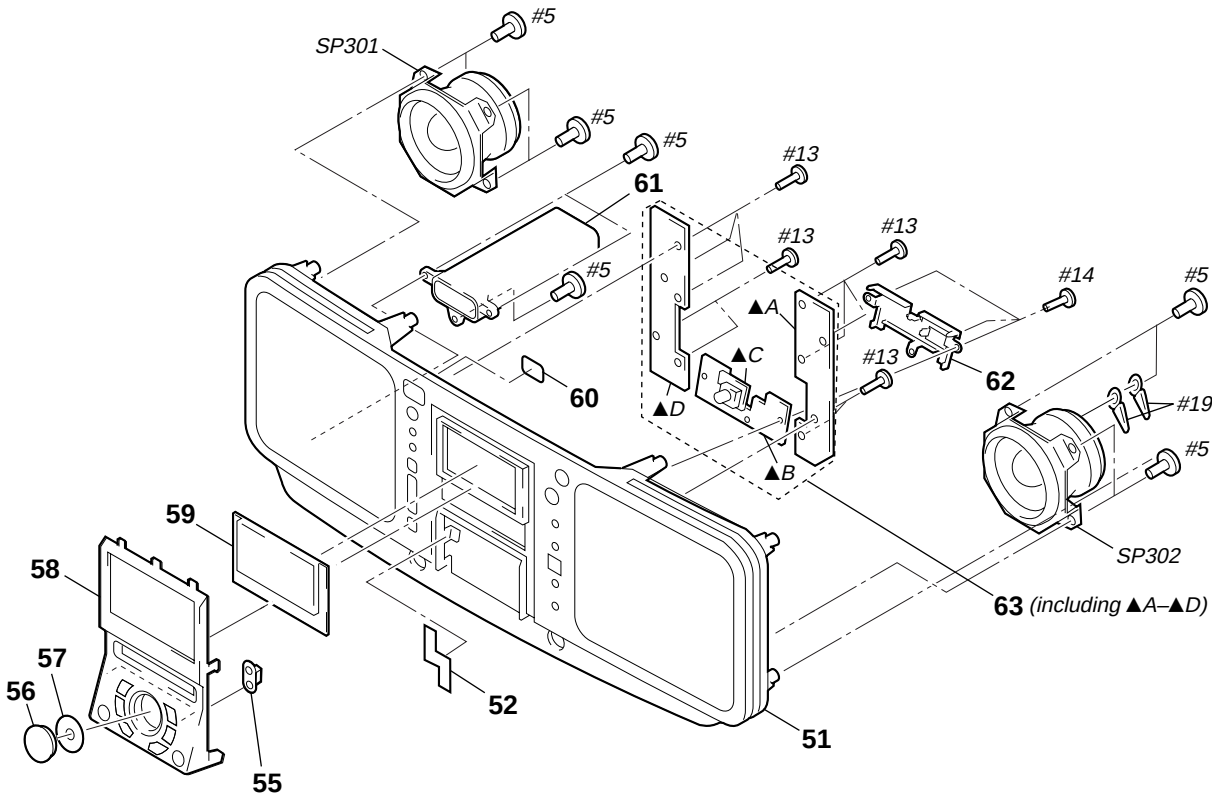

Ref. No.	Part No.	Description	Remark
51	X-3377-217-1	CABINET (FRONT) SUB ASSY	
52	3-032-945-01	SHEET (FRONT), ELECTROSTATIC	
55	3-027-653-01	PLATE (JOG), LIGHT GUIDE	
56	3-027-660-01	DIAL, JOG	
57	3-031-099-01	SHEET (JOG)	
58	A-3320-558-A	FRONT PANEL SUB ASSY	
59	3-027-658-01	WINDOW, LCD	

Ref. No.	Part No.	Description	Remark
60	3-939-014-01	WINDOW, RAY CATCHER	
61	3-027-659-01	DUCT	
62	3-028-879-01	PLATE (JOG), RETAINER	
* 63	A-3323-161-A	CONTROL (F) BOARD, COMPLETE	
SP301	1-505-829-11	SPEAKER (8cm) (L-CH)	
SP302	1-529-130-11	SPEAKER (8cm) (R-CH)	

7-3. CENTER BLOCK SECTION

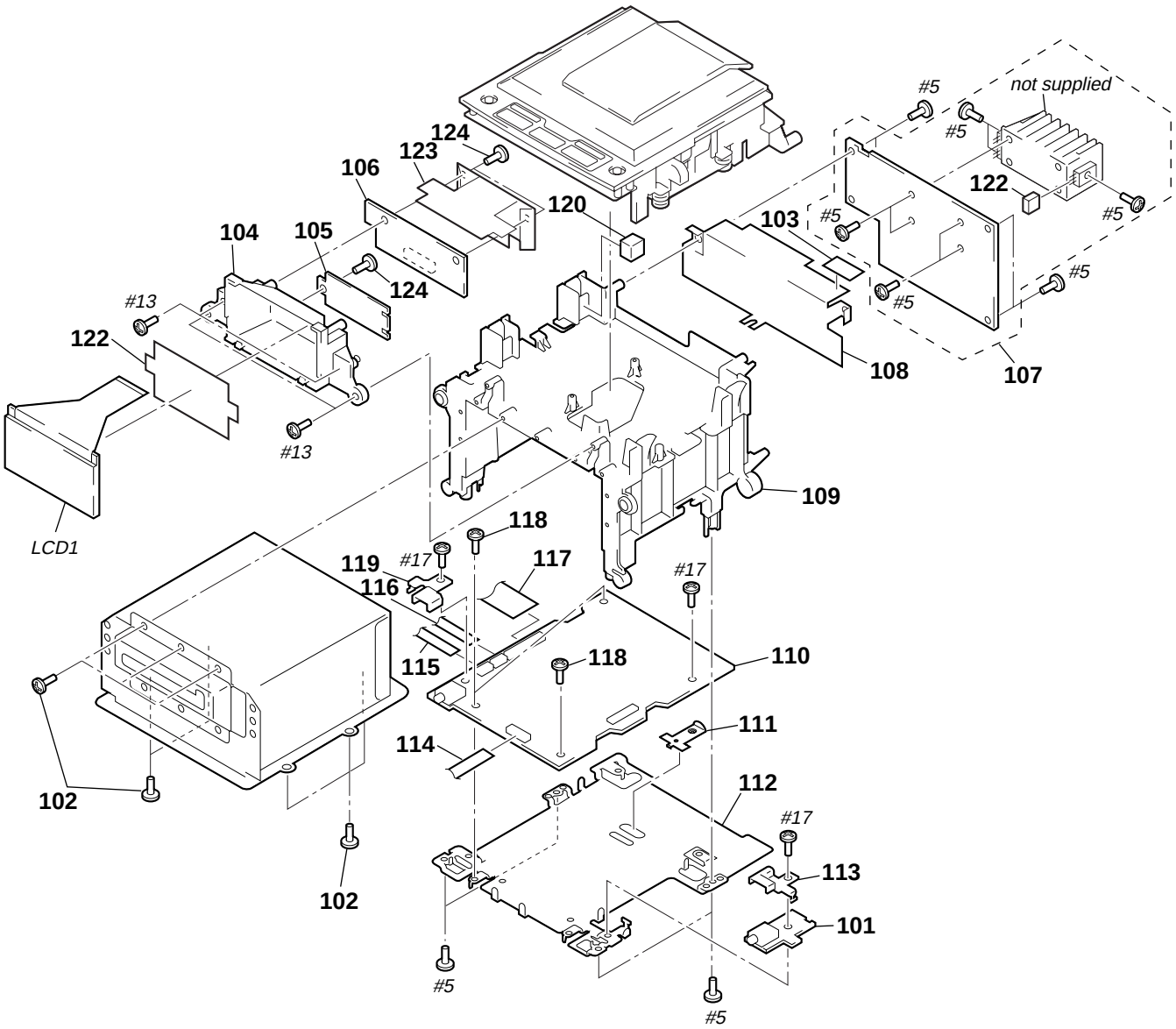

Ref. No.	Part No.	Description	Remark
* 101	1-671-318-21	LINE BOARD	
102	4-931-757-31	SCREW(DIA.2.6X8)(IT3B),TAPPING	
* 103	3-378-400-01	CUSHION, SARANET	
* 104	3-027-672-01	HOLDER, LCD	
* 105	1-671-477-21	BL BOARD	
* 106	1-671-317-21	LCD BOARD	
* 107	A-3323-158-A	AUDIO BOARD, COMPLETE	
* 108	3-032-904-01	COVER (HEAT SINK)	
* 109	3-027-671-01	CHASSIS (MAIN)	
* 110	A-3323-157-A	MAIN BOARD, COMPLETE	
111	3-030-485-01	PLATE (RESET)	
112	3-028-779-01	PLATE, BOTTOM	
* 113	3-028-797-01	BRACKET (LINE)	

Ref. No.	Part No.	Description	Remark
114	1-783-958-11	WIRE, PARALLEL (FFC) (11 CORE)	
115	1-783-957-11	WIRE, PARALLEL (FFC) (8 CORE)	
116	1-783-956-11	WIRE, PARALLEL (FFC) (9 CORE)	
117	1-783-960-11	WIRE, PARALLEL (FFC) (26 CORE)	
118	4-933-134-41	SCREW (+PTPWH 2.6X5)	
* 119	3-028-798-01	BRACKET (HP)	
120	3-033-780-01	SPACER (GEAR A)	
* 122	1-562-327-00	SOCKET, CONNECTOR 3P	
* 123	3-031-123-01	COVER, LCD	
124	4-931-757-31	SCREW(DIA.2.6X8)(IT3B),TAPPING	
LCD1	1-803-283-11	LCD UNIT	

7-4. UPPER CABINET SECTION

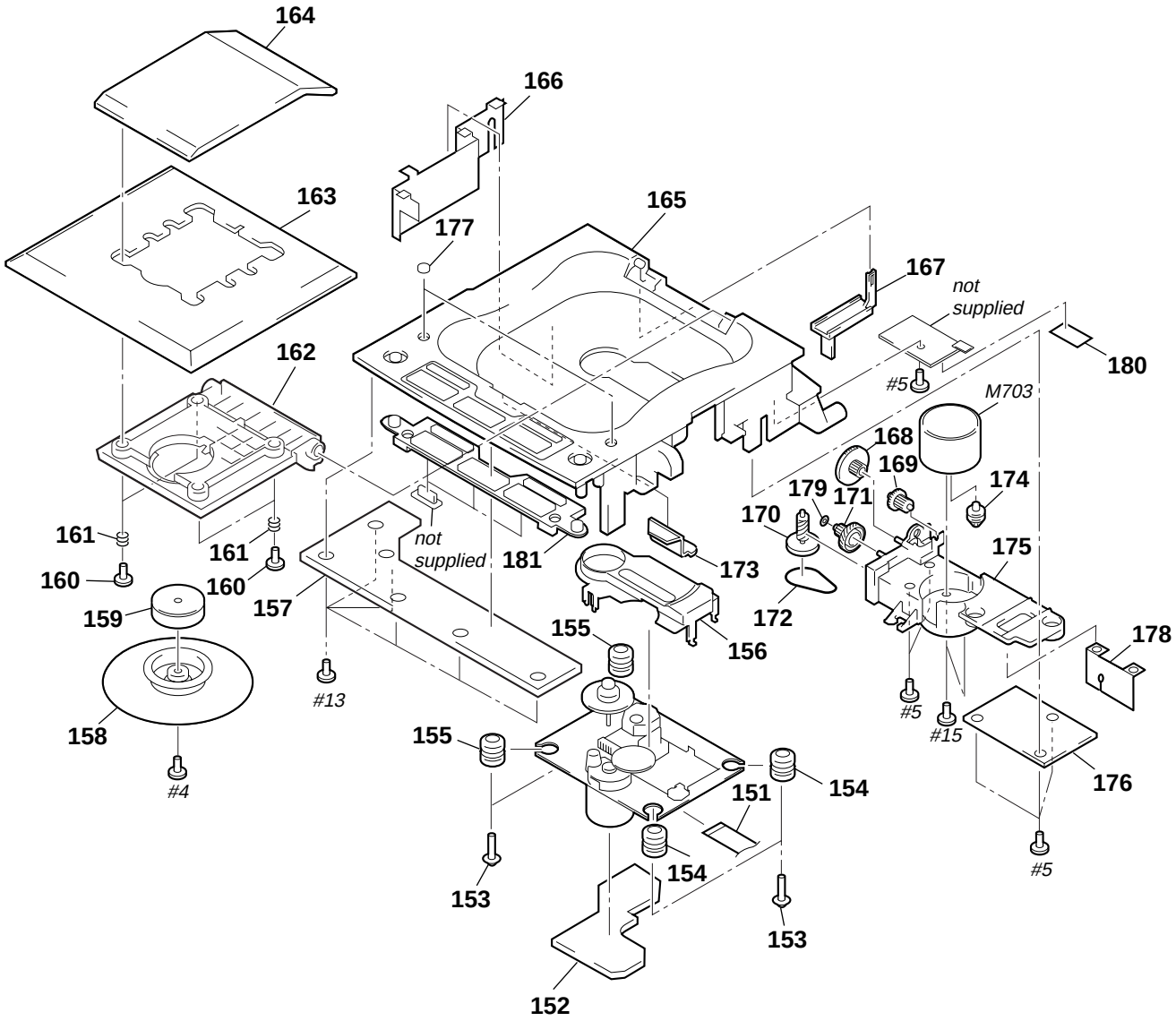

Ref. No.	Part No.	Description	Remark
151	1-783-955-11	WIRE, PARALLEL (FFC) (16 CORE)	
* 152	1-639-678-12	CD MOTOR BOARD	
153	3-921-725-01	SCREW (2.6X10), +PWH	
154	3-931-379-01	RUBBER, VIBRATION PROOF (RED)	
155	3-910-095-31	RUBBER, VIBRATION PROOF (GREEN)	
156	3-910-116-01	COVER, CD	
* 157	A-3321-849-A	CONTROL SW BOARD	
158	3-029-900-01	PLATE (KSM-213-CDM), CHUCKING	
159	1-452-732-11	MAGNET	
160	3-029-901-01	SCREW (3X8)	
161	3-028-968-01	SPRING, COMPRESSION	
162	3-027-663-01	HOLDER, CHUCKING	
163	3-027-661-01	LID, CD	
164	3-027-662-01	PLATE, CD ORNAMENTAL	
165	3-027-648-01	CABINET (UPPER)	
166	3-032-880-01	COVER (3) (CD)	

Ref. No.	Part No.	Description	Remark
167	3-028-820-01	LEVER (O/C)	
168	3-027-667-01	GEAR (C)	
169	3-027-668-01	GEAR (D)	
170	3-017-031-21	GEAR (A)	
171	3-017-032-01	GEAR (B)	
172	3-033-230-01	BELT	
173	3-027-655-01	PLATE (CD), LIGHT GUIDE	
174	2-627-174-01	PULLEY (M)	
* 175	3-027-666-01	CHASSIS, MOTOR	
* 176	A-3323-155-A	MOTOR BOARD, COMPLETE	
177	3-029-908-01	CUSHION (CD)	
* 178	3-032-893-01	COVER (4) (CD)	
179	3-033-781-01	WASHER (GEAR D)	
* 180	3-378-400-01	CUSHION, SARANET	
181	3-028-795-01	BUTTON (TOP)	
M703	1-763-224-11	MOTOR, DC (DOOR OPEN/CLOSE)	

7-5. MD SECTION (1)
(MDM-3Z)

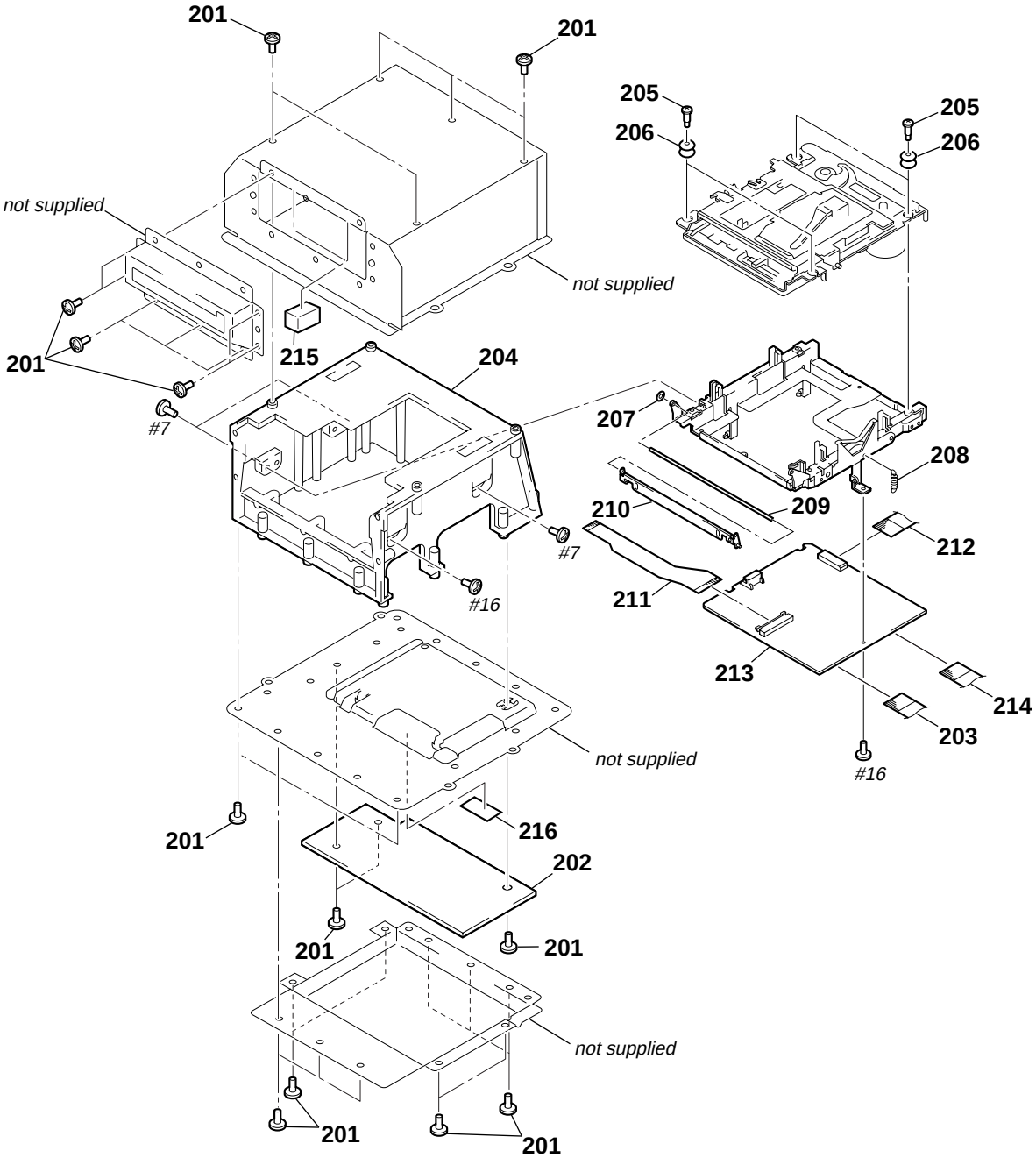

Ref. No.	Part No.	Description	Remark
201	4-931-757-31	SCREW(DIA.2.6X8)(IT3B),TAPPING	
* 202	A-3323-164-A	DG BOARD, COMPLETE	
203	1-783-961-11	WIRE, PARALLEL (FFC) (19 CORE)	
* 204	3-027-682-01	CHASSIS (MD)	
205	4-628-167-01	SCREW, STEP	
206	4-987-327-01	INSULATOR	
207	4-986-959-01	WASHER	
208	4-987-910-01	SPRING (O/C), TENSION	
209	4-987-736-01	SHAFT, SHUTTER	
210	X-4947-825-1	SHUTTER ASSY	
211	1-660-966-11	OP RALAY FLEXIBLE BOARD	
212	1-777-517-11	WIRE, PARALLEL (15 CORE)	
* 213	A-3293-900-A	BD BOARD, COMPLETE	
214	1-783-962-11	WIRE, PARALLEL (FFC) (29 CORE)	
215	3-032-950-01	CUSHION (MD), RUBBER	
216	3-378-435-01	CUSHION, SARANET	

7-6. MD SECTION (2)
(MDM-3Z)

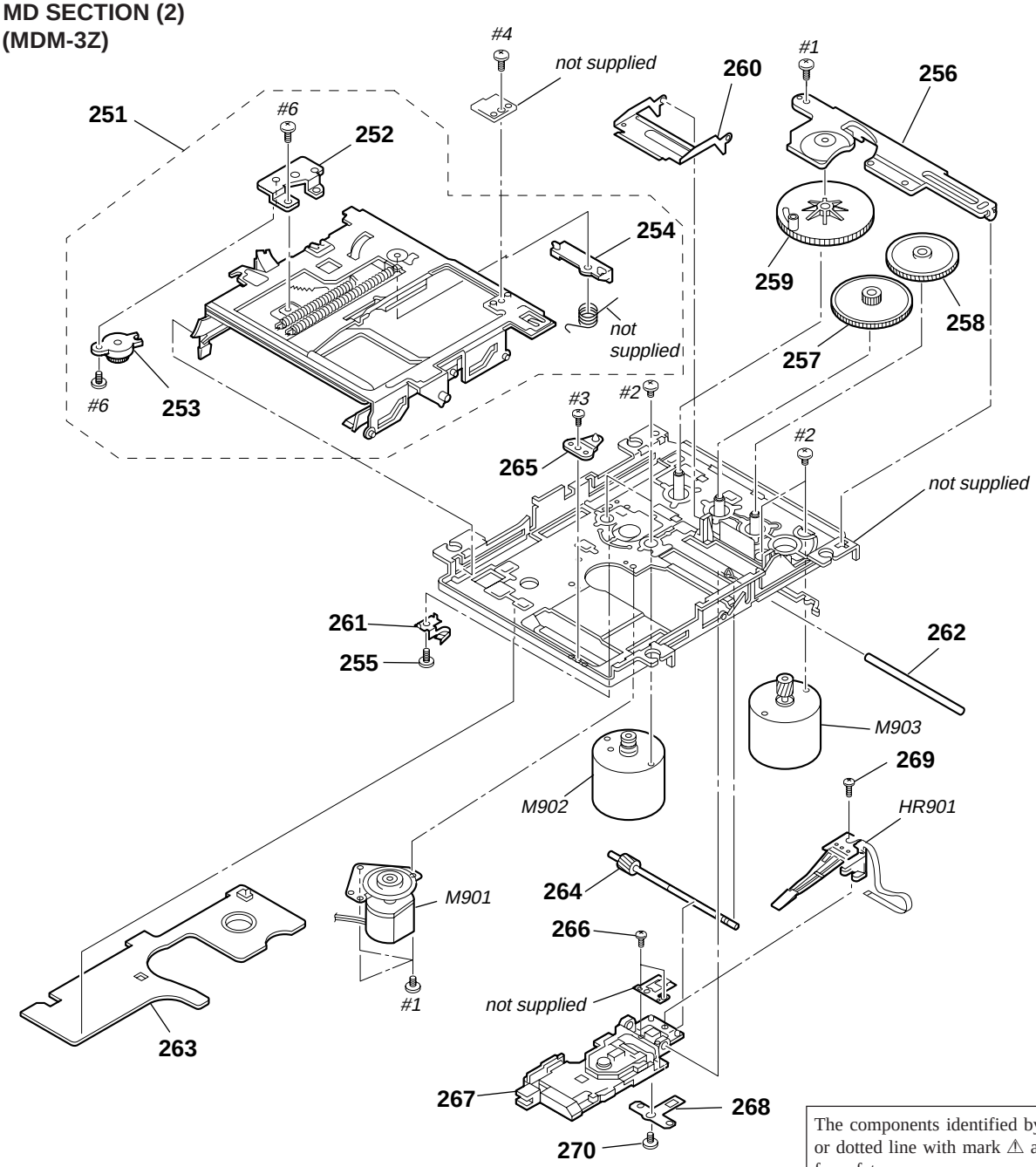

The components identified by mark ⚠ or dotted line with mark ⚠ are critical for safety.
Replace only with part number specified.

Ref. No.	Part No.	Description	Remark
251	A-4672-138-A	SLIDER COMPLETE ASSY	
* 252	4-983-439-01	BRACKET (DAMPER)	
253	3-953-235-01	DAMPER, OIL	
* 254	4-983-437-01	SLIDER (CAM)	
255	3-342-375-11	SCREW (M1.7X1.4), SPECIAL	
* 256	4-979-890-25	RETAINER (GEAR)	
257	4-979-898-01	GEAR (LB)	
258	4-979-899-01	GEAR (LC)	
259	4-979-897-01	GEAR (LA)	
260	4-979-885-01	LEVER (HEAD UP)	
261	4-979-906-11	SPRING (LEAD SCREW)	
* 262	4-984-556-01	SHAFT (MAIN SHAFT)	
* 263	1-661-774-11	SW BOARD	
264	A-3304-200-A	SCREW ASSY, LEAD	
* 265	4-983-511-02	PIN (OUTSERT)	
266	3-366-890-11	SCREW (M1.4)	
⚠267	8-583-028-02	OPTICAL PICK-UP KMS-260A	
268	4-987-061-01	SPACER (RACK)	
269	4-988-560-01	SCREW (+P1.7X6)	
270	4-955-841-11	SCREW	
HR901	1-500-396-11	HEAD, OVER WRITE	
M901	A-4672-135-A	MOTOR ASSY, SPINDLE (SPINDLE)	
M902	A-4672-133-A	MOTOR ASSY, SLED (SLED) (INCLUDING GEAR)	
M903	A-4672-134-A	MOTOR ASSY, LOADING (LOADING) (INCLUDING GEAR)	

7-7. CD OPTICAL PICK-UP SECTION (KSM-213CDM)

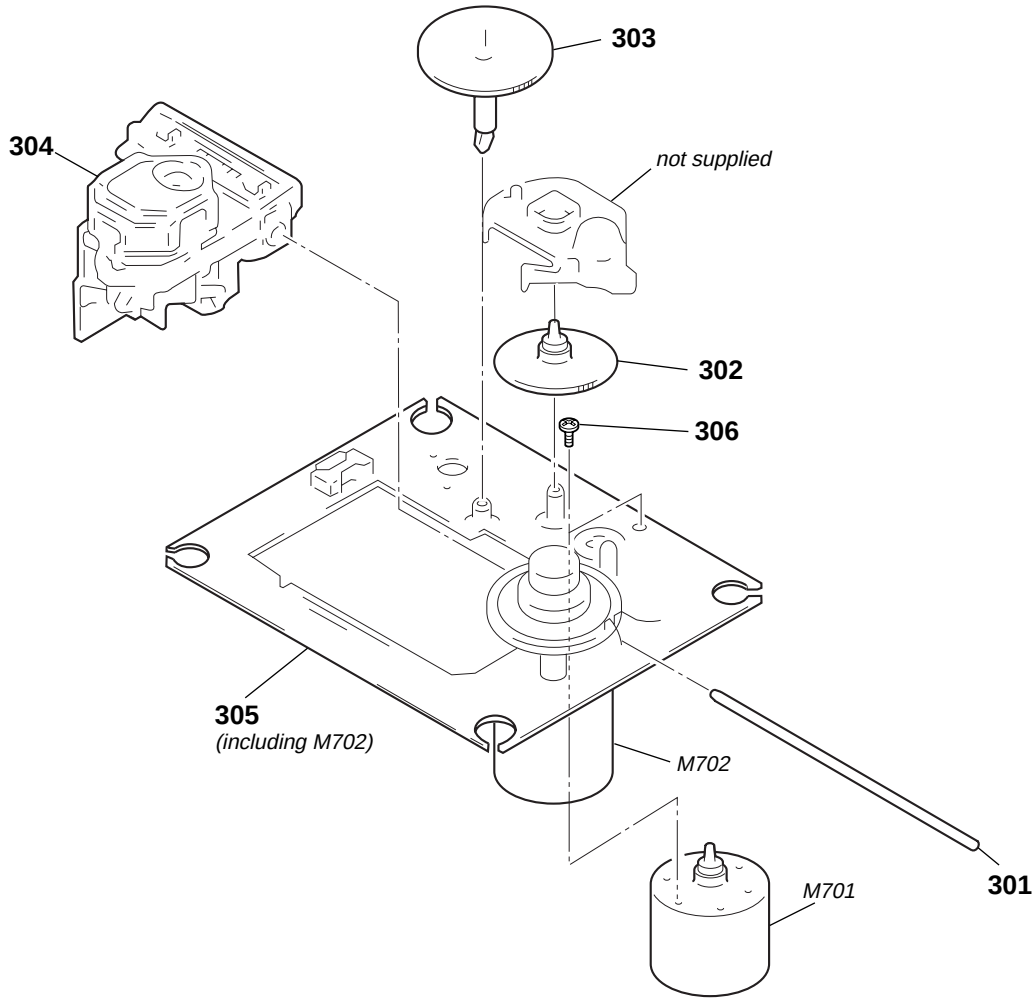

The components identified by mark ⚠ or dotted line with mark ⚠ are critical for safety.
Replace only with part number specified.

Ref. No.	Part No.	Description	Remark
301	2-626-908-01	SHAFT, SLED	
302	2-627-003-02	GEAR (B) (RP)	
303	2-626-907-01	GEAR (A)	
⚠304	8-848-483-05	OPTICAL PICK-UP KSS-213C	

Ref. No.	Part No.	Description	Remark
305	X-2626-202-1	MOTOR SHASSIS ASSY(MB) (INCLUDING M702)	(SPINDLE)
306	3-713-786-51	SCREW +P 2X3	
M701	X-2625-769-1	MOTOR GEAR ASSY (MB) (INCLUDING GEAR)	(SLED)

ANTENNA SW **AUDIO**

SECTION 8
ELECTRICAL PARTS LIST

NOTE :

- Due to standardization, replacements in the parts list may be different from the parts specified in the diagrams or the components used on the set.
- -XX, -X mean standardized parts, so they may have some difference from the original one.
- RESISTORS
  All resistors are in ohms
  METAL : Metal-film resistor
  METAL OXIDE :Metal oxide-film resistor
  F : nonflammable
- Items marked " * "are not stocked since they are seldom required for routine service. Some delay should be anticipated when ordering these items.
- SEMICONDUCTORS
  In each case, u : μ , for example :
  uA.... : μ A.... , uPA.... : μ PA....
  uPB.... : μ PB.... , uPC.... : μ PC....
  uPD.... : μ PD....
- CAPACITORS
  uF : μ F
- COILS
  uH : μ H

The components identified by mark ⚠ or dotted line with mark ⚠ are critical for safety.
Replace only with part number specified.

When indicating parts by reference number, please include the board.

Ref. No.	Part No.	Description			Remark
*	1-675-236-11	ANTENNA SW BOARD			
		**********			
		< SWITCH >			
S1	1-771-672-11	SWITCH, SLIDE (FM ANTENNA SELECTOR)			
**********					
*	A-3323-158-A	AUDIO BOARD, COMPLETE			
		**********			
*	1-562-327-00	SOCKET, CONNECTOR 3P			
	7-685-647-79	SCREW +BVTP 3X10 TYPE2 N-S			
		< CAPACITOR >			
C112	1-126-960-11	ELECT	1uF	20%	50V
C113	1-136-165-00	FILM	0.1uF	5%	50V
C114	1-136-157-00	FILM	0.022uF	5%	50V
C115	1-130-480-00	MYLAR	0.0056uF	5%	50V
C116	1-136-165-00	FILM	0.1uF	5%	50V
C117	1-136-165-00	FILM	0.1uF	5%	50V
C118	1-126-964-11	ELECT	10uF	20%	50V
C119	1-126-963-11	ELECT	4.7uF	20%	50V
C120	1-163-009-11	CERAMIC CHIP	0.001uF	10%	50V
C121	1-104-665-11	ELECT	100uF	20%	10V
C122	1-107-725-11	CERAMIC CHIP	0.1uF	10%	16V
C123	1-126-960-11	ELECT	1uF	20%	50V
C124	1-136-165-00	FILM	0.1uF	5%	50V
C125	1-163-009-11	CERAMIC CHIP	0.001uF	10%	50V
C126	1-136-165-00	FILM	0.1uF	5%	50V
C127	1-163-021-91	CERAMIC CHIP	0.01uF	10%	50V
C128	1-126-963-11	ELECT	4.7uF	20%	50V
C129	1-126-934-11	ELECT	220uF	20%	10V
C130	1-163-259-91	CERAMIC CHIP	220PF	5%	50V
C212	1-126-960-11	ELECT	1uF	20%	50V
C213	1-136-165-00	FILM	0.1uF	5%	50V
C214	1-136-157-00	FILM	0.022uF	5%	50V
C215	1-130-480-00	MYLAR	0.0056uF	5%	50V
C216	1-136-165-00	FILM	0.1uF	5%	50V
C217	1-136-165-00	FILM	0.1uF	5%	50V
C218	1-126-964-11	ELECT	10uF	20%	50V
C219	1-126-961-11	ELECT	2.2uF	20%	50V
C220	1-163-009-11	CERAMIC CHIP	0.001uF	10%	50V
C221	1-104-665-11	ELECT	100uF	20%	10V
C222	1-107-725-11	CERAMIC CHIP	0.1uF	10%	16V

Ref. No.	Part No.	Description			Remark
C223	1-130-495-00	MYLAR	0.1uF	5%	50V
C224	1-136-165-00	FILM	0.1uF	5%	50V
C225	1-163-017-00	CERAMIC CHIP	0.0047uF	5%	50V
C226	1-136-165-00	FILM	0.1uF	5%	50V
C227	1-163-037-11	CERAMIC CHIP	0.022uF	10%	25V
C228	1-126-959-11	ELECT	0.47uF	20%	50V
C229	1-126-934-11	ELECT	220uF	20%	10V
C230	1-163-259-91	CERAMIC CHIP	220PF	5%	50V
C301	1-164-492-11	CERAMIC CHIP	0.15uF	10%	16V
C302	1-163-021-91	CERAMIC CHIP	0.01uF	10%	50V
C303	1-124-994-11	ELECT	100uF	20%	10V
C304	1-163-021-91	CERAMIC CHIP	0.01uF	10%	50V
C305	1-124-995-11	ELECT	220uF	20%	10V
C306	1-128-551-11	ELECT	22uF	20%	25V
C309	1-126-959-11	ELECT	0.47uF	20%	50V
C310	1-163-009-11	CERAMIC CHIP	0.001uF	10%	50V
C311	1-163-009-11	CERAMIC CHIP	0.001uF	10%	50V
C312	1-107-725-11	CERAMIC CHIP	0.1uF	10%	16V
C313	1-163-021-91	CERAMIC CHIP	0.01uF	10%	50V
C314	1-163-021-91	CERAMIC CHIP	0.01uF	10%	50V
C315	1-126-964-11	ELECT	10uF	20%	50V
C316	1-163-017-00	CERAMIC CHIP	0.0047uF	5%	50V
C317	1-124-994-11	ELECT	100uF	20%	10V
C318	1-109-982-11	CERAMIC CHIP	1uF	10%	10V
C319	1-126-934-11	ELECT	220uF	20%	10V
C320	1-107-725-11	CERAMIC CHIP	0.1uF	10%	16V
C321	1-126-934-11	ELECT	220uF	20%	10V
C322	1-126-925-11	ELECT	470uF	20%	10V
C323	1-124-994-11	ELECT	100uF	20%	10V
C324	1-107-725-11	CERAMIC CHIP	0.1uF	10%	16V
C325	1-126-934-11	ELECT	220uF	20%	10V
C326	1-126-960-11	ELECT	1uF	20%	50V
C327	1-126-964-11	ELECT	10uF	20%	50V
C328	1-126-964-11	ELECT	10uF	20%	50V
C329	1-163-017-00	CERAMIC CHIP	0.0047uF	5%	50V
C330	1-126-937-11	ELECT	4700uF	20%	16V
C331	1-117-207-11	ELECT(BLOCK)	6800uF	20%	25V
C332	1-163-019-00	CERAMIC CHIP	0.0068uF	10%	50V
C333	1-126-966-11	ELECT	33uF	20%	16V
C334	1-163-021-91	CERAMIC CHIP	0.01uF	10%	50V
C335	1-126-964-11	ELECT	10uF	20%	50V
C336	1-126-964-11	ELECT	10uF	20%	50V
C337	1-107-725-11	CERAMIC CHIP	0.1uF	10%	16V

Ref. No.	Part No.	Description			Remark
C338	1-104-665-11	ELECT	100uF	20%	10V
C339	1-163-021-91	CERAMIC CHIP	0.01uF	10%	50V
C341	1-107-682-11	CERAMIC CHIP	1uF	10%	16V
C342	1-107-725-11	CERAMIC CHIP	0.1uF	10%	16V
C343	1-126-960-11	ELECT	1uF	20%	50V
C345	1-126-963-11	ELECT	4.7uF	20%	50V
C346	1-104-665-11	ELECT	100uF	20%	10V
C347	1-104-665-11	ELECT	100uF	20%	10V
C348	1-163-259-91	CERAMIC CHIP	220PF	5%	50V
		< CONNECTOR >			
* CN301	1-564-509-11	PLUG, CONNECTOR 6P			
* CN302	1-564-509-11	PLUG, CONNECTOR 6P			
		< DIODE >			
D301	8-719-988-61	DIODE 1SS355TE-17			
D302	8-719-056-83	DIODE UDZ-TE-17-6.8B			
D303	8-719-976-99	DIODE DTZ5.1B			
D304	8-719-988-61	DIODE 1SS355TE-17			
D306	8-719-056-85	DIODE UDZ-TE-17-8.2B			
D307	8-719-988-61	DIODE 1SS355TE-17			
		< IC >			
IC305	8-759-538-94	IC LA4663			
IC307	8-759-636-55	IC M5218AFP			
IC309	8-759-701-02	IC NJM2073M			
IC311	8-759-100-96	IC NJM4558M-TE2			
IC312	8-759-569-64	IC BH3863F-E2			
		< JUMPER RESISTOR >			
JC557	1-216-295-00	METAL CHIP	0	5%	1/10W
JC558	1-216-296-00	METAL CHIP	0	5%	1/8W
JC559	1-216-296-00	METAL CHIP	0	5%	1/8W
JC560	1-216-296-00	METAL CHIP	0	5%	1/8W
JC561	1-216-295-00	METAL CHIP	0	5%	1/10W
JC562	1-216-295-00	METAL CHIP	0	5%	1/10W
JC564	1-216-295-00	METAL CHIP	0	5%	1/10W
JC565	1-216-295-00	METAL CHIP	0	5%	1/10W
JC566	1-216-295-00	METAL CHIP	0	5%	1/10W
		< TRANSISTOR >			
Q101	8-729-920-31	TRANSISTOR DTC343TK			
Q104	8-729-920-31	TRANSISTOR DTC343TK			
Q105	8-729-920-31	TRANSISTOR DTC343TK			
Q201	8-729-920-31	TRANSISTOR DTC343TK			
Q204	8-729-920-31	TRANSISTOR DTC343TK			
Q205	8-729-920-31	TRANSISTOR DTC343TK			
Q301	8-729-920-85	TRANSISTOR 2SD1664-QR			
Q304	8-729-920-41	TRANSISTOR FMC3			
Q305	8-729-120-28	TRANSISTOR 2SC1623-L5L6			
Q306	8-729-021-82	TRANSISTOR 2SD2396K			
Q307	8-729-922-62	TRANSISTOR 2SD1760F5-TLQ			
Q308	8-729-903-46	TRANSISTOR 2SB1132-P			
Q309	8-729-027-46	TRANSISTOR DTC114YKA-T146			
Q310	8-729-920-41	TRANSISTOR FMC3			
Q313	8-729-120-28	TRANSISTOR 2SC1623-L5L6			
Q314	8-729-027-46	TRANSISTOR DTC114YKA-T146			

Ref. No.	Part No.	Description			Remark
		< RESISTOR >			
R101	1-216-013-00	METAL CHIP	33	5%	1/10W
R111	1-216-295-00	METAL CHIP	0	5%	1/10W
R112	1-216-057-00	METAL CHIP	2.2K	5%	1/10W
R117	1-216-093-91	RES,CHIP	68K	5%	1/10W
R118	1-216-073-00	METAL CHIP	10K	5%	1/10W
R119	1-216-073-00	METAL CHIP	10K	5%	1/10W
R120	1-216-073-00	METAL CHIP	10K	5%	1/10W
R121	1-216-296-00	METAL CHIP	0	5%	1/8W
R122	1-216-061-00	METAL CHIP	3.3K	5%	1/10W
R123	1-216-049-91	RES,CHIP	1K	5%	1/10W
R124	1-216-055-00	METAL CHIP	1.8K	5%	1/10W
R125	1-216-049-91	RES,CHIP	1K	5%	1/10W
R126	1-216-029-00	METAL CHIP	150	5%	1/10W
R127	1-216-214-00	RES,CHIP	4.7K	5%	1/8W
R128	1-216-308-00	METAL CHIP	4.7	5%	1/10W
R129	1-216-049-91	RES,CHIP	1K	5%	1/10W
R130	1-216-298-00	METAL CHIP	2.2	5%	1/10W
R132	1-216-298-00	METAL CHIP	2.2	5%	1/10W
R151	1-216-121-91	RES,CHIP	1M	5%	1/10W
R152	1-216-121-91	RES,CHIP	1M	5%	1/10W
R201	1-216-013-00	METAL CHIP	33	5%	1/10W
R211	1-216-063-91	RES,CHIP	3.9K	5%	1/10W
R212	1-216-057-00	METAL CHIP	2.2K	5%	1/10W
R217	1-216-093-91	RES,CHIP	68K	5%	1/10W
R218	1-216-073-00	METAL CHIP	10K	5%	1/10W
R219	1-216-057-00	METAL CHIP	2.2K	5%	1/10W
R220	1-216-057-00	METAL CHIP	2.2K	5%	1/10W
R221	1-216-295-00	METAL CHIP	0	5%	1/10W
R222	1-216-064-00	METAL CHIP	4.3K	5%	1/10W
R223	1-216-049-91	RES,CHIP	1K	5%	1/10W
R224	1-216-055-00	METAL CHIP	1.8K	5%	1/10W
R225	1-216-049-91	RES,CHIP	1K	5%	1/10W
R226	1-216-029-00	METAL CHIP	150	5%	1/10W
R227	1-216-065-91	RES,CHIP	4.7K	5%	1/10W
R228	1-216-308-00	METAL CHIP	4.7	5%	1/10W
R229	1-216-049-91	RES,CHIP	1K	5%	1/10W
R230	1-216-298-00	METAL CHIP	2.2	5%	1/10W
R232	1-216-298-00	METAL CHIP	2.2	5%	1/10W
R251	1-216-121-91	RES,CHIP	1M	5%	1/10W
R252	1-216-121-91	RES,CHIP	1M	5%	1/10W
R302	1-216-049-91	RES,CHIP	1K	5%	1/10W
R303	1-216-049-91	RES,CHIP	1K	5%	1/10W
R304	1-216-049-91	RES,CHIP	1K	5%	1/10W
R305	1-216-061-00	METAL CHIP	3.3K	5%	1/10W
R306	1-216-075-00	METAL CHIP	12K	5%	1/10W
R307	1-216-037-00	METAL CHIP	330	5%	1/10W
R309	1-216-037-00	METAL CHIP	330	5%	1/10W
R310	1-216-081-00	METAL CHIP	22K	5%	1/10W
R311	1-216-105-91	RES,CHIP	220K	5%	1/10W
R312	1-216-075-00	METAL CHIP	12K	5%	1/10W
R313	1-216-075-00	METAL CHIP	12K	5%	1/10W
R314	1-216-073-00	METAL CHIP	10K	5%	1/10W
R315	1-216-073-00	METAL CHIP	10K	5%	1/10W
R316	1-216-073-00	METAL CHIP	10K	5%	1/10W
R317	1-216-113-00	METAL CHIP	470K	5%	1/10W
R318	1-216-295-00	METAL CHIP	0	5%	1/10W

AUDIO **BATT** **BD**

Ref. No.	Part No.	Description			Remark
R319	1-216-049-91	RES,CHIP	1K	5%	1/10W
R320	1-216-121-91	RES,CHIP	1M	5%	1/10W
R321	1-216-041-00	METAL CHIP	470	5%	1/10W
R322	1-216-025-91	RES,CHIP	100	5%	1/10W
R327	1-216-049-91	RES,CHIP	1K	5%	1/10W
R328	1-216-089-91	RES,CHIP	47K	5%	1/10W
R331	1-216-049-91	RES,CHIP	1K	5%	1/10W
R332	1-216-049-91	RES,CHIP	1K	5%	1/10W
R335	1-216-017-91	RES,CHIP	47	5%	1/10W
R336	1-216-017-91	RES,CHIP	47	5%	1/10W
R339	1-216-089-91	RES,CHIP	47K	5%	1/10W
R341	1-216-041-00	METAL CHIP	470	5%	1/10W
R343	1-216-013-00	METAL CHIP	33	5%	1/10W
R344	1-216-049-91	RES,CHIP	1K	5%	1/10W
R345	1-216-049-91	RES,CHIP	1K	5%	1/10W
R346	1-216-049-91	RES,CHIP	1K	5%	1/10W
R348	1-216-041-00	METAL CHIP	470	5%	1/10W
**********					
*	1-671-314-21	BATT BOARD			
		**********			
	3-028-894-01	TERMINAL (+), BATTERY			
	3-028-895-01	TERMINAL (-), BATTERY			
		< CAPACITOR >			
C915	1-163-021-91	CERAMIC CHIP	0.01uF	10%	50V
**********					
*	A-3293-900-A	BD BOARD, COMPLETE			
		**********			
		< CAPACITOR >			
C101	1-104-851-11	TANTAL. CHIP	10uF	20%	10V
C102	1-163-038-91	CERAMIC CHIP	0.1uF		25V
C103	1-104-851-11	TANTAL. CHIP	10uF	20%	10V
C104	1-104-851-11	TANTAL. CHIP	10uF	20%	10V
C105	1-163-021-91	CERAMIC CHIP	0.01uF	10%	50V
C106	1-163-275-11	CERAMIC CHIP	0.001uF	5%	50V
C107	1-163-038-91	CERAMIC CHIP	0.1uF		25V
C108	1-163-038-91	CERAMIC CHIP	0.1uF		25V
C109	1-163-037-11	CERAMIC CHIP	0.022uF	10%	25V
C110	1-163-038-91	CERAMIC CHIP	0.1uF		25V
C111	1-164-344-11	CERAMIC CHIP	0.068uF	10%	25V
C112	1-163-017-00	CERAMIC CHIP	0.0047uF	5%	50V
C113	1-107-682-11	CERAMIC CHIP	1uF	10%	16V
C115	1-164-489-11	CERAMIC CHIP	0.22uF	10%	16V
C116	1-163-037-11	CERAMIC CHIP	0.022uF	10%	25V
C117	1-164-004-11	CERAMIC CHIP	0.1uF	10%	25V
C119	1-104-851-11	TANTAL. CHIP	10uF	20%	10V
C121	1-126-206-11	ELECT CHIP	100uF	20%	6.3V
C122	1-163-021-91	CERAMIC CHIP	0.01uF	10%	50V
C123	1-163-038-91	CERAMIC CHIP	0.1uF		25V
C124	1-163-038-91	CERAMIC CHIP	0.1uF		25V
C127	1-163-038-91	CERAMIC CHIP	0.1uF		25V
C128	1-163-021-91	CERAMIC CHIP	0.01uF	10%	50V
C129	1-107-823-11	CERAMIC CHIP	0.47uF	10%	16V
C130	1-163-251-11	CERAMIC CHIP	100PF	5%	50V
C131	1-163-023-00	CERAMIC CHIP	0.015uF	5%	50V

Ref. No.	Part No.	Description			Remark
C132	1-107-823-11	CERAMIC CHIP	0.47uF	10%	16V
C133	1-163-017-00	CERAMIC CHIP	0.0047uF	5%	50V
C134	1-163-038-91	CERAMIC CHIP	0.1uF		25V
C135	1-163-038-91	CERAMIC CHIP	0.1uF		25V
C136	1-126-206-11	ELECT CHIP	100uF	20%	6.3V
C141	1-163-038-91	CERAMIC CHIP	0.1uF		25V
C142	1-163-251-11	CERAMIC CHIP	100PF	5%	50V
C143	1-163-251-11	CERAMIC CHIP	100PF	5%	50V
C144	1-163-251-11	CERAMIC CHIP	100PF	5%	50V
C146	1-163-038-91	CERAMIC CHIP	0.1uF		25V
C151	1-126-206-11	ELECT CHIP	100uF	20%	6.3V
C152	1-163-038-91	CERAMIC CHIP	0.1uF		25V
C153	1-163-021-91	CERAMIC CHIP	0.01uF	10%	50V
C156	1-163-038-91	CERAMIC CHIP	0.1uF		25V
C158	1-163-019-00	CERAMIC CHIP	0.0068uF	10%	50V
C160	1-104-601-11	ELECT CHIP	10uF	20%	10V
C161	1-104-601-11	ELECT CHIP	10uF	20%	10V
C163	1-163-021-91	CERAMIC CHIP	0.01uF	10%	50V
C164	1-163-021-91	CERAMIC CHIP	0.01uF	10%	50V
C167	1-163-038-91	CERAMIC CHIP	0.1uF		25V
C168	1-163-038-91	CERAMIC CHIP	0.1uF		25V
C169	1-104-851-11	TANTAL. CHIP	10uF	20%	10V
C171	1-163-038-91	CERAMIC CHIP	0.1uF		25V
C181	1-126-206-11	ELECT CHIP	100uF	20%	6.3V
C182	1-163-038-91	CERAMIC CHIP	0.1uF		25V
C183	1-163-038-91	CERAMIC CHIP	0.1uF		25V
C184	1-107-836-11	ELECT CHIP	22uF	20%	8V
C185	1-164-611-11	CERAMIC CHIP	0.001uF	10%	500V
C187	1-126-206-11	ELECT CHIP	100uF	20%	6.3V
C188	1-163-021-91	CERAMIC CHIP	0.01uF	10%	50V
C189	1-163-989-11	CERAMIC CHIP	0.033uF	10%	25V
C190	1-126-206-11	ELECT CHIP	100uF	20%	6.3V
C191	1-163-038-91	CERAMIC CHIP	0.1uF		25V
C195	1-164-346-11	CERAMIC CHIP	1uF		16V
C196	1-163-038-91	CERAMIC CHIP	0.1uF		25V
C197	1-163-038-91	CERAMIC CHIP	0.1uF		25V
		< CONNECTOR >			
CN101	1-766-508-11	CONNECTOR, FFC/FPC (ZIF) 22P			
CN102	1-778-461-11	CONNECTOR, FFC/FPC 29P			
CN103	1-778-460-11	CONNECTOR, FFC/FPC 19P			
CN104	1-766-898-21	HOUSING, CONNECTOR(PC BOARD)4P			
CN106	1-770-698-11	CONNECTOR, FFC/FPC 15P			
CN110	1-774-731-21	PIN, CONNECTOR (PC BOARD) 5P			
		< DIODE >			
D101	8-719-988-61	DIODE 1SS355TE-17			
D181	8-719-046-86	DIODE F1J6TP			
D183	8-719-046-86	DIODE F1J6TP			
		< IC >			
IC101	8-752-074-77	IC CXA2523R			
IC103	8-729-903-10	TRANSISTOR FMW1			
IC121	8-752-384-47	IC CXD2652AR			
IC122	8-759-234-20	IC TC7S08F			
IC123	8-759-242-70	IC TC7WU04F			
IC124	8-759-473-29	IC MN41V4400SJ-08-T1			

Ref. No.	Part No.	Description			Remark
IC152	8-759-430-25	IC BH6511FS			
IC171	8-759-428-58	IC XL24C01AF-E2			
IC181	8-759-095-65	IC TC74ACT540FS			
IC192	8-759-426-95	IC L88MS33T-TL			
		< COIL >			
L101	1-414-235-11	INDUCTOR CHIP			
L102	1-414-235-11	INDUCTOR CHIP			
L103	1-414-235-11	INDUCTOR CHIP			
L105	1-414-235-11	INDUCTOR CHIP			
L106	1-414-235-11	INDUCTOR CHIP			
L121	1-414-235-11	INDUCTOR CHIP			
L122	1-414-235-11	INDUCTOR CHIP			
L151	1-412-622-51	INDUCTOR	10uH		
L152	1-412-622-51	INDUCTOR	10uH		
L153	1-412-039-51	INDUCTOR CHIP	100uH		
L154	1-412-039-51	INDUCTOR CHIP	100uH		
L161	1-414-235-11	INDUCTOR CHIP			
L162	1-414-235-11	INDUCTOR CHIP			
		< TRANSISTOR >			
Q101	8-729-028-91	TRANSISTOR	DTA144EUA-T106		
Q102	8-729-026-53	TRANSISTOR	2SA1576A-T106-QR		
Q103	8-729-028-99	TRANSISTOR	DTC114YUA-T106		
Q104	8-729-028-99	TRANSISTOR	DTC114YUA-T106		
Q162	8-729-101-07	TRANSISTOR	2SB798-DL		
Q163	8-729-028-91	TRANSISTOR	DTA144EUA-T106		
Q180	8-729-028-96	TRANSISTOR	DTC114EUA-T106		
Q181	8-729-018-75	TRANSISTOR	2SJ278MY		
Q182	8-729-017-65	TRANSISTOR	2SK1764KY		
		< RESISTOR >			
R101	1-216-295-00	METAL CHIP	0	5%	1/10W
R103	1-216-049-91	RES,CHIP	1K	5%	1/10W
R104	1-216-073-00	METAL CHIP	10K	5%	1/10W
R105	1-216-065-91	RES,CHIP	4.7K	5%	1/10W
R106	1-216-133-00	METAL CHIP	3.3M	5%	1/10W
R107	1-216-113-00	METAL CHIP	470K	5%	1/10W
R109	1-216-295-00	METAL CHIP	0	5%	1/10W
R110	1-216-073-00	METAL CHIP	10K	5%	1/10W
R111	1-216-295-00	METAL CHIP	0	5%	1/10W
R112	1-216-089-91	RES,CHIP	47K	5%	1/10W
R113	1-216-049-91	RES,CHIP	1K	5%	1/10W
R115	1-216-049-91	RES,CHIP	1K	5%	1/10W
R117	1-216-113-00	METAL CHIP	470K	5%	1/10W
R120	1-216-025-91	RES,CHIP	100	5%	1/10W
R121	1-216-097-91	RES,CHIP	100K	5%	1/10W
R123	1-216-033-00	METAL CHIP	220	5%	1/10W
R124	1-216-025-91	RES,CHIP	100	5%	1/10W
R125	1-216-025-91	RES,CHIP	100	5%	1/10W
R127	1-216-025-91	RES,CHIP	100	5%	1/10W
R131	1-216-073-00	METAL CHIP	10K	5%	1/10W
R132	1-216-097-91	RES,CHIP	100K	5%	1/10W
R133	1-216-117-00	METAL CHIP	680K	5%	1/10W
R134	1-216-049-91	RES,CHIP	1K	5%	1/10W
R135	1-216-061-00	METAL CHIP	3.3K	5%	1/10W
R136	1-216-049-91	RES,CHIP	1K	5%	1/10W
R137	1-216-025-91	RES,CHIP	100	5%	1/10W

Ref. No.	Part No.	Description			Remark
R140	1-216-029-00	METAL CHIP	150	5%	1/10W
R141	1-216-295-00	METAL CHIP	0	5%	1/10W
R142	1-216-073-00	METAL CHIP	10K	5%	1/10W
R143	1-216-073-00	METAL CHIP	10K	5%	1/10W
R144	1-216-025-91	RES,CHIP	100	5%	1/10W
R146	1-216-037-00	METAL CHIP	330	5%	1/10W
R147	1-216-025-91	RES,CHIP	100	5%	1/10W
R148	1-216-045-00	METAL CHIP	680	5%	1/10W
R150	1-216-295-00	METAL CHIP	0	5%	1/10W
R158	1-216-097-91	RES,CHIP	100K	5%	1/10W
R159	1-216-097-91	RES,CHIP	100K	5%	1/10W
R161	1-216-057-00	METAL CHIP	2.2K	5%	1/10W
R162	1-216-057-00	METAL CHIP	2.2K	5%	1/10W
R163	1-216-057-00	METAL CHIP	2.2K	5%	1/10W
R164	1-216-045-00	METAL CHIP	680	5%	1/10W
R165	1-216-097-91	RES,CHIP	100K	5%	1/10W
R166	1-220-149-11	REGISTER	2.2	10%	1/2W
R167	1-216-065-91	RES,CHIP	4.7K	5%	1/10W
R169	1-219-724-11	METAL CHIP	1	1%	1/4W
R170	1-216-073-00	METAL CHIP	10K	5%	1/10W
R171	1-216-073-00	METAL CHIP	10K	5%	1/10W
R172	1-216-295-00	METAL CHIP	0	5%	1/10W
R173	1-216-121-91	RES,CHIP	1M	5%	1/10W
R175	1-216-061-00	METAL CHIP	3.3K	5%	1/10W
R176	1-216-295-00	METAL CHIP	0	5%	1/10W
R177	1-216-061-00	METAL CHIP	3.3K	5%	1/10W
R178	1-216-295-00	METAL CHIP	0	5%	1/10W
R179	1-216-089-91	RES,CHIP	47K	5%	1/10W
R180	1-216-073-00	METAL CHIP	10K	5%	1/10W
R181	1-216-073-00	METAL CHIP	10K	5%	1/10W
R182	1-216-089-91	RES,CHIP	47K	5%	1/10W
R183	1-216-089-91	RES,CHIP	47K	5%	1/10W
R184	1-216-073-00	METAL CHIP	10K	5%	1/10W
R185	1-216-073-00	METAL CHIP	10K	5%	1/10W
R186	1-216-296-00	METAL CHIP	0	5%	1/8W
R187	1-216-296-00	METAL CHIP	0	5%	1/8W
R188	1-216-073-00	METAL CHIP	10K	5%	1/10W
R189	1-216-073-00	METAL CHIP	10K	5%	1/10W
R190	1-216-073-00	METAL CHIP	10K	5%	1/10W
R195	1-216-295-00	METAL CHIP	0	5%	1/10W
R196	1-216-295-00	METAL CHIP	0	5%	1/10W
R198	1-216-295-00	METAL CHIP	0	5%	1/10W
R199	1-216-295-00	METAL CHIP	0	5%	1/10W
R200	1-216-295-00	METAL CHIP	0	5%	1/10W
R201	1-216-295-00	METAL CHIP	0	5%	1/10W
R202	1-216-295-00	METAL CHIP	0	5%	1/10W
R502	1-216-295-00	METAL CHIP	0	5%	1/10W
R504	1-216-295-00	METAL CHIP	0	5%	1/10W

****

*	1-671-477-21	BL BOARD	
		*********	
		< PILOT LAMP >	
PL553	1-517-848-11	LAMP, PILOT (LCD BACK-LIGHT)	
PL554	1-517-848-11	LAMP, PILOT (LCD BACK-LIGHT)	
PL555	1-517-848-11	LAMP, PILOT (LCD BACK-LIGHT)	

****

CD MOROR | CONTROL (F) | CONTROL (L) | CONTROL (R) | JOG

Ref. No.	Part No.	Description			Remark
*	1-639-678-12	CD MOTOR BOARD			
		**********			
		< CONNECTOR >			
CNP707	1-564-722-11	PIN, CONNECTOR (SMALL TYPE) 6P			
		< SWITCH >			
S701	1-572-085-11	SWITCH, LEAF (LIMIT)			
**********					
*	A-3323-161-A	CONTROL (F) BOARD, COMPLETE			
		**********			
		< CAPACITOR >			
C555	1-163-038-91	CERAMIC CHIP	0.1uF		25V
C556	1-163-038-91	CERAMIC CHIP	0.1uF		25V
		< CONNECTOR >			
CN551	1-563-614-31	HOUSING, CONNECTOR 11P			
		< DIODE >			
D553	8-719-047-57	LED SLA-362MT3F-A47 (AMS/PRESET)			
D554	8-719-047-57	LED SLA-362MT3F-A47 (SELECT)			
		< TRANSISTOR >			
Q553	8-729-027-58	TRANSISTOR DTC143ZKA-T146			
Q554	8-729-027-58	TRANSISTOR DTC143ZKA-T146			
		< RESISTOR >			
R551	1-216-033-00	METAL CHIP	220	5%	1/10W
R552	1-216-079-00	METAL CHIP	18K	5%	1/10W
R558	1-216-069-00	METAL CHIP	6.8K	5%	1/10W
R559	1-216-061-00	METAL CHIP	3.3K	5%	1/10W
R560	1-216-056-00	RES,CHIP	2K	5%	1/10W
R561	1-216-051-00	METAL CHIP	1.2K	5%	1/10W
R562	1-216-048-00	METAL CHIP	910	5%	1/10W
R563	1-216-045-00	METAL CHIP	680	5%	1/10W
		< SWITCH >			
S557	1-692-014-11	SWITCH, KEY BOARD (DELETE CLOCK)			
S558	1-692-014-11	SWITCH, KEY BOARD (TUNE ⇦ – ◀◀)			
S559	1-692-014-11	SWITCH, KEY BOARD (NO CANCEL)			
S560	1-692-014-11	SWITCH, KEY BOARD (EDIT)			
S561	1-692-014-11	SWITCH, KEY BOARD (YES ENTER)			
S562	1-692-014-11	SWITCH, KEY BOARD (DISPLAY)			
S563	1-692-014-11	SWITCH, KEY BOARD (TUNE + ⇨▶▶)			
S564	1-692-014-11	SWITCH, KEY BOARD (INSERT TIMER)			
		CONTROL (L) BOARD			
		**********			
		< CAPACITOR >			
C557	1-163-021-91	CERAMIC CHIP	0.01uF	10%	50V
C558	1-124-259-11	ELECT	4.7uF	20%	16V
		< FERRITE BEAD >			
FB303	1-500-445-21	FERRITE			

Ref. No.	Part No.	Description			Remark
		< IC >			
IC550	8-742-129-00	HYB SBX1971-51P			
		< RESISTOR >			
R570	1-216-045-00	METAL CHIP	680	5%	1/10W
R571	1-216-048-00	METAL CHIP	910	5%	1/10W
R572	1-216-051-00	METAL CHIP	1.2K	5%	1/10W
R573	1-216-056-00	RES,CHIP	2K	5%	1/10W
R574	1-216-061-00	METAL CHIP	3.3K	5%	1/10W
R575	1-216-069-00	METAL CHIP	6.8K	5%	1/10W
R579	1-216-085-00	METAL CHIP	33K	5%	1/10W
		< SWITCH >			
S572	1-692-014-11	SWITCH, KEY BOARD (OPERATE)			
S573	1-692-014-11	SWITCH, KEY BOARD (SLEEP)			
S574	1-692-014-11	SWITCH, KEY BOARD (STANDBY)			
S575	1-692-014-11	SWITCH, KEY BOARD (SYNCHRO REC CD ▶ MD)			
S576	1-692-014-11	SWITCH, KEY BOARD (REC IT TO END)			
S577	1-692-014-11	SWITCH, KEY BOARD (REC IT TO TOP)			
S578	1-692-014-11	SWITCH, KEY BOARD (REC)			
		CONTROL (R) BOARD			
		**********			
		< RESISTOR >			
R564	1-216-069-00	METAL CHIP	6.8K	5%	1/10W
R565	1-216-061-00	METAL CHIP	3.3K	5%	1/10W
R566	1-216-056-00	RES,CHIP	2K	5%	1/10W
R567	1-216-051-00	METAL CHIP	1.2K	5%	1/10W
R568	1-216-048-00	METAL CHIP	910	5%	1/10W
R569	1-216-045-00	METAL CHIP	680	5%	1/10W
		< SWITCH >			
S565	1-692-014-11	SWITCH, KEY BOARD (VOLUME +)			
S566	1-692-014-11	SWITCH, KEY BOARD (VOLUME –)			
S567	1-692-014-11	SWITCH, KEY BOARD (BASS/TREBLE)			
S568	1-692-014-11	SWITCH, KEY BOARD (MEGA BASS)			
S569	1-692-014-11	SWITCH, KEY BOARD (⏏ MD EJECT)			
S570	1-692-014-11	SWITCH, KEY BOARD (MONO/ST REPEAT)			
S571	1-692-014-11	SWITCH, KEY BOARD (AUTO PRESET/RDS SHUF/PGM)			
		JOG BOARD			
		**********			
		< CAPACITOR >			
C553	1-163-038-91	CERAMIC CHIP	0.1uF		25V
C554	1-163-038-91	CERAMIC CHIP	0.1uF		25V
		< SWITCH >			
S556	1-475-977-11	SWITCH, ROTARY (JOG DIAL , – ⏮, ⏭ +)			
**********					

Ref. No.	Part No.	Description			Remark
*	A-3321-849-A	CONTROL SW BOARD			
		**********			
		< CAPACITOR >			
C550	1-163-021-91	CERAMIC CHIP	0.01uF	10%	50V
C551	1-163-021-91	CERAMIC CHIP	0.01uF	10%	50V
C552	1-163-021-91	CERAMIC CHIP	0.01uF	10%	50V
		< CONNECTOR >			
CN550	1-691-067-31	HOUSING, CONNECTOR 8P			
		< DIODE >			
D550	8-719-047-57	LED SLA-362MT3F-A47 (MD)			
D551	8-719-047-57	LED SLA-362MT3F-A47 (CD)			
D552	8-719-047-57	LED SLA-362MT3F-A47 (RADIO)			
		< PILOT LAMP >			
PL550	1-517-848-11	LAMP, PILOT (CD LIGHT)			
		< TRANSISTOR >			
Q550	8-729-027-58	TRANSISTOR DTC143ZKA-T146			
Q551	8-729-027-58	TRANSISTOR DTC143ZKA-T146			
Q552	8-729-027-58	TRANSISTOR DTC143ZKA-T146			
		< RESISTOR >			
R550	1-216-029-00	METAL CHIP	150	5%	1/10W
R553	1-216-069-00	METAL CHIP	6.8K	5%	1/10W
R554	1-216-061-00	METAL CHIP	3.3K	5%	1/10W
R555	1-216-056-00	RES,CHIP	2K	5%	1/10W
R556	1-216-051-00	METAL CHIP	1.2K	5%	1/10W
R557	1-216-048-00	METAL CHIP	910	5%	1/10W
R578	1-216-194-00	METAL CHIP	680	5%	1/8W
		< SWITCH >			
S550	1-692-014-11	SWITCH, KEY BOARD (□)			
S551	1-692-014-11	SWITCH, KEY BOARD (▷II MD)			
S552	1-692-014-11	SWITCH, KEY BOARD (BAND RADIO)			
S553	1-692-014-11	SWITCH, KEY BOARD (▷II CD)			
S554	1-692-014-11	SWITCH, KEY BOARD (□)			
S555	1-692-014-11	SWITCH, KEY BOARD (⏏ CD OPEN/CLOSE)			
S579	1-692-014-11	SWITCH, KEY BOARD (LINE/LINE LEVEL)			
**********					
*	A-3323-164-A	DG BOARD, COMPLETE			
		**********			
		< CAPACITOR >			
C601	1-162-959-11	CERAMIC CHIP	330PF	5%	50V
C602	1-163-263-11	CERAMIC CHIP	330PF	5%	50V
C603	1-163-005-11	CERAMIC CHIP	470PF	10%	50V
C604	1-163-263-11	CERAMIC CHIP	330PF	5%	50V
C605	1-164-156-11	CERAMIC CHIP	0.1uF		25V
C606	1-162-927-11	CERAMIC CHIP	100PF	5%	50V
C607	1-162-927-11	CERAMIC CHIP	100PF	5%	50V
C608	1-162-916-11	CERAMIC CHIP	12PF	5%	50V
C609	1-162-916-11	CERAMIC CHIP	12PF	5%	50V
C610	1-164-156-11	CERAMIC CHIP	0.1uF		25V
C611	1-164-156-11	CERAMIC CHIP	0.1uF		25V
C612	1-164-156-11	CERAMIC CHIP	0.1uF		25V
C613	1-162-927-11	CERAMIC CHIP	100PF	5%	50V
C614	1-163-251-11	CERAMIC CHIP	100PF	5%	50V
C615	1-164-156-11	CERAMIC CHIP	0.1uF		25V
C616	1-164-156-11	CERAMIC CHIP	0.1uF		25V
C617	1-164-156-11	CERAMIC CHIP	0.1uF		25V
C618	1-109-994-11	CERAMIC CHIP	2.2uF	10%	10V
C619	1-126-207-11	ELECT CHIP	33uF	20%	4V
C620	1-107-823-11	CERAMIC CHIP	0.47uF	10%	16V
C621	1-162-970-11	CERAMIC CHIP	0.01uF	10%	25V
C622	1-164-156-11	CERAMIC CHIP	0.1uF		25V
C624	1-162-915-11	CERAMIC CHIP	10PF	0.5PF	50V
C625	1-162-915-11	CERAMIC CHIP	10PF	0.5PF	50V
C626	1-163-021-91	CERAMIC CHIP	0.01uF	10%	50V
C627	1-164-156-11	CERAMIC CHIP	0.1uF		25V
C628	1-126-205-11	ELECT CHIP	47uF	20%	6.3V
C629	1-126-205-11	ELECT CHIP	47uF	20%	6.3V
C632	1-126-603-11	ELECT CHIP	4.7uF	20%	35V
C633	1-126-603-11	ELECT CHIP	4.7uF	20%	35V
C634	1-162-970-11	CERAMIC CHIP	0.01uF	10%	25V
C635	1-126-205-11	ELECT CHIP	47uF	20%	6.3V
C636	1-163-227-11	CERAMIC CHIP	10PF	0.5PF	50V
C637	1-126-603-11	ELECT CHIP	4.7uF	20%	35V
C638	1-162-927-11	CERAMIC CHIP	100PF	5%	50V
C639	1-124-779-00	ELECT CHIP	10uF	20%	16V
C640	1-126-603-11	ELECT CHIP	4.7uF	20%	35V
C641	1-164-004-11	CERAMIC CHIP	0.1uF	10%	25V
C642	1-126-205-11	ELECT CHIP	47uF	20%	6.3V
C644	1-164-156-11	CERAMIC CHIP	0.1uF		25V
C645	1-164-156-11	CERAMIC CHIP	0.1uF		25V
C650	1-162-966-11	CERAMIC CHIP	0.0022uF	10%	50V
C651	1-162-966-11	CERAMIC CHIP	0.0022uF	10%	50V
C655	1-162-970-11	CERAMIC CHIP	0.01uF	10%	25V
C657	1-162-970-11	CERAMIC CHIP	0.01uF	10%	25V
C658	1-162-966-11	CERAMIC CHIP	0.0022uF	10%	50V
C659	1-163-021-91	CERAMIC CHIP	0.01uF	10%	50V
C660	1-126-205-11	ELECT CHIP	47uF	20%	6.3V
C661	1-162-966-11	CERAMIC CHIP	0.0022uF	10%	50V
C662	1-163-038-91	CERAMIC CHIP	0.1uF		25V
C666	1-162-923-11	CERAMIC CHIP	47PF	5%	50V
C668	1-163-038-91	CERAMIC CHIP	0.1uF		25V
C670	1-126-205-11	ELECT CHIP	47uF	20%	6.3V
C672	1-162-970-11	CERAMIC CHIP	0.01uF	10%	25V
C673	1-162-915-11	CERAMIC CHIP	10PF	0.5PF	50V
C674	1-162-970-11	CERAMIC CHIP	0.01uF	10%	25V
C675	1-163-251-11	CERAMIC CHIP	100PF	5%	50V
C676	1-163-251-11	CERAMIC CHIP	100PF	5%	50V
C680	1-162-915-11	CERAMIC CHIP	10PF	0.5PF	50V
		< CONNECTOR >			
CN601	1-785-371-21	CONNECTOR, FFC/FPC 29P			
CN602	1-785-372-11	CONNECTOR, FFC/FPC 19P			
* CN603	1-580-055-21	PIN, CONNECTOR (SMD) 2P			
* CN604	1-785-370-21	CONNECTOR, FFC/FPC 26P			
		< DIODE >			
D601	8-719-914-43	DIODE DAN202K			

DG

Ref. No.	Part No.	Description			Remark
D602	8-719-988-61	DIODE 1SS355TE-17			
		< FERRITE BEAD >			
FB601	1-500-445-21	FERRITE			
FB602	1-469-125-21	FERRITE			
FB603	1-469-125-21	FERRITE			
FB604	1-469-125-21	FERRITE			
FB605	1-469-125-21	FERRITE			
FB606	1-469-125-21	FERRITE			
FB607	1-500-445-21	FERRITE			
FB608	1-469-125-21	FERRITE			
FB609	1-469-125-21	FERRITE			
FB610	1-412-973-11	INDUCTOR	0.33UH		
FB611	1-500-445-21	FERRITE			
FB612	1-469-185-11	FERRITE			
FB613	1-500-445-21	FERRITE			
FB614	1-500-445-21	FERRITE			
FB615	1-500-445-21	FERRITE			
FB616	1-500-445-21	FERRITE			
FB617	1-500-445-21	FERRITE			
FB618	1-500-445-21	FERRITE			
FB619	1-500-445-21	FERRITE			
FB620	1-500-445-21	FERRITE			
FB621	1-500-445-21	FERRITE			
FB622	1-500-445-21	FERRITE			
FB623	1-500-445-21	FERRITE			
FB624	1-500-445-21	FERRITE			
FB625	1-500-445-21	FERRITE			
FB626	1-500-445-21	FERRITE			
FB627	1-216-295-00	METAL CHIP	0	5%	1/10W
FB628	1-500-445-21	FERRITE			
FB630	1-469-125-21	FERRITE			
FB631	1-500-445-21	FERRITE			
FB632	1-500-445-21	FERRITE			
FB633	1-469-185-11	FERRITE			
FB634	1-469-185-11	FERRITE			
FB636	1-500-445-21	FERRITE			
FB637	1-500-445-21	FERRITE			
FB638	1-500-445-21	FERRITE			
FB639	1-500-445-21	FERRITE			
FB640	1-500-445-21	FERRITE			
FB641	1-500-445-21	FERRITE			
FB642	1-500-445-21	FERRITE			
FB643	1-500-445-21	FERRITE			
FB644	1-500-445-21	FERRITE			
FB645	1-500-445-21	FERRITE			
FB646	1-500-445-21	FERRITE			
FB647	1-500-445-21	FERRITE			
FB648	1-500-445-21	FERRITE			
FB649	1-500-445-21	FERRITE			
FB650	1-469-125-21	FERRITE			
FB651	1-469-125-21	FERRITE			
FB652	1-216-295-00	METAL CHIP	0	5%	1/10W
FB653	1-216-295-00	METAL CHIP	0	5%	1/10W
FB654	1-500-445-21	FERRITE			
FB655	1-469-185-11	FERRITE			
FB656	1-469-185-11	FERRITE			
FB657	1-469-185-11	FERRITE			
FB658	1-500-445-21	FERRITE			
		< FILTER >			
FL601	1-239-901-21	FERRITE			
FL602	1-239-901-21	FERRITE			
FL603	1-239-899-21	FILTER, CHIP EMI			
FL604	1-239-899-21	FILTER, CHIP EMI			
FL605	1-239-899-21	FILTER, CHIP EMI			
FL606	1-239-899-21	FILTER, CHIP EMI			
* FL607	1-125-971-21	FILTER, 3 TERMINAL NOISE			
* FL608	1-125-971-21	FILTER, 3 TERMINAL NOISE			
* FL611	1-125-971-21	FILTER, 3 TERMINAL NOISE			
* FL612	1-125-971-21	FILTER, 3 TERMINAL NOISE			
* FL619	1-125-971-21	FILTER, 3 TERMINAL NOISE			
* FL620	1-125-971-21	FILTER, 3 TERMINAL NOISE			
		< IC >			
IC601	8-759-494-80	IC RU8X12MF-0021			
IC602	8-759-040-83	IC BA6287F			
IC603	8-759-561-36	IC PCM3003E/T2			
IC604	8-759-243-19	IC TC7SU04F			
IC605	8-759-096-87	IC TC7WU04FU(TE12R)			
		< JUMPER RESISTOR >			
JC601	1-216-049-91	RES,CHIP	1K	5%	1/10W
JC603	1-216-049-91	RES,CHIP	1K	5%	1/10W
JC604	1-216-295-00	METAL CHIP	0	5%	1/10W
JC605	1-216-295-00	METAL CHIP	0	5%	1/10W
JC606	1-216-296-00	METAL CHIP	0	5%	1/8W
JC607	1-216-295-00	METAL CHIP	0	5%	1/10W
JC608	1-216-295-00	METAL CHIP	0	5%	1/10W
JC609	1-216-864-11	METAL CHIP	0	5%	1/16W
JC610	1-216-864-11	METAL CHIP	0	5%	1/16W
JC611	1-216-864-11	METAL CHIP	0	5%	1/16W
JC612	1-216-864-11	METAL CHIP	0	5%	1/16W
JC613	1-216-295-00	METAL CHIP	0	5%	1/10W
JC614	1-216-296-00	METAL CHIP	0	5%	1/8W
JC615	1-216-295-00	METAL CHIP	0	5%	1/10W
JC616	1-216-295-00	METAL CHIP	0	5%	1/10W
JC617	1-216-295-00	METAL CHIP	0	5%	1/10W
JC618	1-216-295-00	METAL CHIP	0	5%	1/10W
JC619	1-216-295-00	METAL CHIP	0	5%	1/10W
JC620	1-216-295-00	METAL CHIP	0	5%	1/10W
JC621	1-216-295-00	METAL CHIP	0	5%	1/10W
JC622	1-216-295-00	METAL CHIP	0	5%	1/10W
JC623	1-216-295-00	METAL CHIP	0	5%	1/10W
JC624	1-216-295-00	METAL CHIP	0	5%	1/10W
		< COIL >			
L601	1-414-521-21	INDUCTOR CHIP	10uH		
L602	1-414-398-11	INDUCTOR	10uH		
L603	1-414-398-11	INDUCTOR	10uH		
L604	1-414-398-11	INDUCTOR	10uH		
L605	1-414-398-11	INDUCTOR	10uH		
L606	1-414-398-11	INDUCTOR	10uH		
L607	1-414-398-11	INDUCTOR	10uH		
L608	1-414-398-11	INDUCTOR	10uH		
L609	1-414-398-11	INDUCTOR	10uH		

Ref. No.	Part No.	Description			Remark
L610	1-414-398-11	INDUCTOR	10uH		
L611	1-416-107-21	INDUCTOR			
L612	1-414-398-11	INDUCTOR	10uH		
L613	1-414-398-11	INDUCTOR	10uH		
L614	1-414-398-11	INDUCTOR	10uH		
L615	1-500-445-21	FERRITE			
L616	1-500-445-21	FERRITE			
L617	1-500-445-21	FERRITE			
L618	1-500-445-21	FERRITE			
L619	1-414-398-11	INDUCTOR	10uH		
L620	1-414-398-11	INDUCTOR	10uH		
L621	1-414-521-21	INDUCTOR CHIP	10uH		
L622	1-414-521-21	INDUCTOR CHIP	10uH		
		< TRANSISTOR >			
Q601	8-729-031-43	TRANSISTOR	IMD9A-T108		
Q602	8-729-031-43	TRANSISTOR	IMD9A-T108		
Q603	8-729-402-84	TRANSISTOR	XN4601		
Q604	8-729-402-84	TRANSISTOR	XN4601		
Q605	8-729-031-43	TRANSISTOR	IMD9A-T108		
Q606	8-729-031-43	TRANSISTOR	IMD9A-T108		
Q607	8-729-031-43	TRANSISTOR	IMD9A-T108		
Q608	8-729-027-56	TRANSISTOR	DTC143TKA-T146		
Q609	8-729-031-43	TRANSISTOR	IMD9A-T108		
Q610	8-729-027-46	TRANSISTOR	DTC114YKA-T146		
Q611	8-729-031-43	TRANSISTOR	IMD9A-T108		
Q612	8-729-101-07	TRANSISTOR	2SB798-DL		
Q615	8-729-027-46	TRANSISTOR	DTC114YKA-T146		
Q616	8-729-027-46	TRANSISTOR	DTC114YKA-T146		
Q617	8-729-019-72	TRANSISTOR	2SB1260		
		< RESISTOR >			
R601	1-216-821-11	METAL CHIP	1K	5%	1/16W
R602	1-216-821-11	METAL CHIP	1K	5%	1/16W
R603	1-216-821-11	METAL CHIP	1K	5%	1/16W
R604	1-216-821-11	METAL CHIP	1K	5%	1/16W
R605	1-216-222-00	RES,CHIP	10K	5%	1/8W
R606	1-216-833-91	RES,CHIP	10K	5%	1/16W
R607	1-216-222-00	RES,CHIP	10K	5%	1/8W
R608	1-216-073-00	METAL CHIP	10K	5%	1/10W
R609	1-216-246-00	RES,CHIP	100K	5%	1/8W
R610	1-216-246-00	RES,CHIP	100K	5%	1/8W
R611	1-216-845-11	METAL CHIP	100K	5%	1/16W
R612	1-216-097-91	RES,CHIP	100K	5%	1/10W
R613	1-216-833-91	RES,CHIP	10K	5%	1/16W
R614	1-216-857-11	METAL CHIP	1M	5%	1/16W
R615	1-216-833-91	RES,CHIP	10K	5%	1/16W
R616	1-216-845-11	METAL CHIP	100K	5%	1/16W
R617	1-216-809-11	METAL CHIP	100	5%	1/16W
R618	1-216-809-11	METAL CHIP	100	5%	1/16W
R619	1-216-845-11	METAL CHIP	100K	5%	1/16W
R620	1-216-851-11	METAL CHIP	330K	5%	1/16W
R621	1-216-833-91	RES,CHIP	10K	5%	1/16W
R622	1-216-833-91	RES,CHIP	10K	5%	1/16W
R623	1-216-833-91	RES,CHIP	10K	5%	1/16W
R624	1-216-073-00	METAL CHIP	10K	5%	1/10W
R625	1-216-833-91	RES,CHIP	10K	5%	1/16W

Ref. No.	Part No.	Description			Remark
R626	1-216-073-00	METAL CHIP	10K	5%	1/10W
R627	1-216-841-11	METAL CHIP	47K	5%	1/16W
R628	1-216-089-91	RES,CHIP	47K	5%	1/10W
R629	1-216-833-91	RES,CHIP	10K	5%	1/16W
R630	1-216-833-91	RES,CHIP	10K	5%	1/16W
R631	1-216-821-11	METAL CHIP	1K	5%	1/16W
R632	1-216-821-11	METAL CHIP	1K	5%	1/16W
R633	1-216-833-91	RES,CHIP	10K	5%	1/16W
R634	1-216-833-91	RES,CHIP	10K	5%	1/16W
R635	1-216-833-91	RES,CHIP	10K	5%	1/16W
R636	1-216-851-11	METAL CHIP	330K	5%	1/16W
R637	1-216-829-11	METAL CHIP	4.7K	5%	1/16W
R638	1-216-841-11	METAL CHIP	47K	5%	1/16W
R639	1-216-847-11	METAL CHIP	150K	5%	1/16W
R640	1-216-821-11	METAL CHIP	1K	5%	1/16W
R641	1-216-843-11	METAL CHIP	68K	5%	1/16W
R642	1-216-833-91	RES,CHIP	10K	5%	1/16W
R643	1-216-807-11	METAL CHIP	68	5%	1/16W
R644	1-216-073-00	METAL CHIP	10K	5%	1/10W
R646	1-216-041-00	METAL CHIP	470	5%	1/10W
R647	1-216-089-91	RES,CHIP	47K	5%	1/10W
R648	1-216-073-00	METAL CHIP	10K	5%	1/10W
R649	1-216-835-11	METAL CHIP	15K	5%	1/16W
R650	1-216-833-91	RES,CHIP	10K	5%	1/16W
R651	1-216-077-00	METAL CHIP	15K	5%	1/10W
R652	1-216-819-11	METAL CHIP	680	5%	1/16W
R653	1-216-073-00	METAL CHIP	10K	5%	1/10W
R654	1-216-073-00	METAL CHIP	10K	5%	1/10W
R655	1-216-073-00	METAL CHIP	10K	5%	1/10W
R656	1-216-073-00	METAL CHIP	10K	5%	1/10W
R657	1-216-841-11	METAL CHIP	47K	5%	1/16W
R658	1-216-853-11	METAL CHIP	470K	5%	1/16W
R659	1-216-817-11	METAL CHIP	470	5%	1/16W
R660	1-216-089-91	RES,CHIP	47K	5%	1/10W
R661	1-216-857-11	METAL CHIP	1M	5%	1/16W
R662	1-216-819-11	METAL CHIP	680	5%	1/16W
R663	1-216-821-11	METAL CHIP	1K	5%	1/16W
R664	1-216-821-11	METAL CHIP	1K	5%	1/16W
R665	1-216-073-00	METAL CHIP	10K	5%	1/10W
R666	1-216-821-11	METAL CHIP	1K	5%	1/16W
R667	1-216-821-11	METAL CHIP	1K	5%	1/16W
R668	1-216-033-00	METAL CHIP	220	5%	1/10W
R669	1-216-857-11	METAL CHIP	1M	5%	1/16W
R671	1-216-049-91	RES,CHIP	1K	5%	1/10W
R672	1-216-049-91	RES,CHIP	1K	5%	1/10W
		< VIBRATOR >			
X601	1-760-174-11	VIBRATOR, CERAMIC (12MHz)			
X602	1-781-183-11	VIBRATOR, CRYSTAL (32.768kHz)			
X603	1-767-151-11	VIBRATOR, CRYSTAL (22.5792MHz)			

****

*	1-671-317-21	LCD BOARD
		**********
	1-803-283-11	LCD UNIT
*	3-027-672-01	HOLDER, LCD
	3-030-437-01	ILLUMINATOR
*	3-031-123-01	COVER, LCD

LCD **LINE** **MAIN**

Ref. No.	Part No.	Description			Remark
	4-931-757-31	SCREW(DIA.2.6X8)(IT3B),TAPPING			
		< CAPACITOR >			
C559	1-163-009-11	CERAMIC CHIP	0.001uF	10%	50V
C560	1-163-009-11	CERAMIC CHIP	0.001uF	10%	50V
C561	1-163-251-11	CERAMIC CHIP	100PF	5%	50V
C562	1-163-251-11	CERAMIC CHIP	100PF	5%	50V
C563	1-163-038-91	CERAMIC CHIP	0.1uF		25V
C564	1-163-009-11	CERAMIC CHIP	0.001uF	10%	50V
C565	1-109-982-11	CERAMIC	1MF	10%	10V
C566	1-109-982-11	CERAMIC	1MF	10%	10V
C567	1-109-982-11	CERAMIC	1MF	10%	10V
C568	1-109-982-11	CERAMIC	1MF	10%	10V
C569	1-109-982-11	CERAMIC	1MF	10%	10V
C570	1-107-823-11	CERAMIC CHIP	0.47uF	10%	16V
C571	1-107-823-11	CERAMIC CHIP	0.47uF	10%	16V
C572	1-107-823-11	CERAMIC CHIP	0.47uF	10%	16V
C573	1-104-665-11	ELECT	100uF	20%	10V
		< CONNECTOR >			
CN552	1-691-068-21	HOUSING, CONNECTOR 9P			
CN553	1-563-624-11	HOUSING, CONNECTOR 21P			
		< JUMPER RESISTOR >			
JC556	1-216-295-00	METAL CHIP	0	5%	1/10W
		< RESISTOR >			
R576	1-216-114-00	RES,CHIP	510K	5%	1/10W
R577	1-216-111-00	METAL CHIP	390K	5%	1/10W
R580	1-216-073-00	METAL CHIP	10K	5%	1/10W
R581	1-216-049-91	RES,CHIP	1K	5%	1/10W
R582	1-216-049-91	RES,CHIP	1K	5%	1/10W
R583	1-216-049-91	RES,CHIP	1K	5%	1/10W
R584	1-216-049-91	RES,CHIP	1K	5%	1/10W
		< VARIABLE RESISTOR >			
RV550	1-238-552-11	RES, ADJ, CARBON 470K (DIMMER)			
**********					
*	1-671-318-21	LINE BOARD			
		**********			
		< CONNECTOR >			
CN314	1-785-712-11	CONNECTOR, BOARD TO BOARD 4P			
		< DIODE >			
D308	8-719-988-61	DIODE 1SS355TE-17			
D309	8-719-988-61	DIODE 1SS355TE-17			
		< FERRITE BEAD >			
FB102	1-500-241-21	FERRITE			
FB202	1-500-241-21	FERRITE			
FB302	1-500-241-21	FERRITE			
		< JACK >			
J302	1-785-369-11	JACK (LINE IN)			
**********					

Ref. No.	Part No.	Description			Remark
*	A-3323-157-A	MAIN BOARD, COMPLETE			
		**********			
	7-685-646-79	SCREW +BVTP	3X8	TYPE2 N-S	
		< CAPACITOR >			
C101	1-126-961-11	ELECT	2.2uF	20%	50V
C102	1-126-961-11	ELECT	2.2uF	20%	50V
C103	1-126-961-11	ELECT	2.2uF	20%	50V
C104	1-126-964-11	ELECT	10uF	20%	50V
C105	1-164-172-11	CERAMIC CHIP	0.0056uF	10%	25V
C106	1-162-979-11	CERAMIC CHIP	0.0027uF	10%	50V
C107	1-124-233-11	ELECT	10uF	20%	16V
C108	1-126-964-11	ELECT	10uF	20%	50V
C109	1-162-970-11	CERAMIC CHIP	0.01uF	10%	25V
C110	1-162-957-11	CERAMIC CHIP	220PF	5%	50V
C111	1-104-665-11	ELECT	100uF	20%	10V
C112	1-126-964-11	ELECT	10uF	20%	50V
C113	1-126-964-11	ELECT	10uF	20%	50V
C114	1-124-257-00	ELECT	2.2uF	20%	50V
C127	1-162-957-11	CERAMIC CHIP	220PF	5%	50V
C201	1-126-961-11	ELECT	2.2uF	20%	50V
C202	1-126-961-11	ELECT	2.2uF	20%	50V
C203	1-126-961-11	ELECT	2.2uF	20%	50V
C204	1-126-964-11	ELECT	10uF	20%	50V
C205	1-164-172-11	CERAMIC CHIP	0.0056uF	10%	25V
C206	1-162-979-11	CERAMIC CHIP	0.0027uF	10%	50V
C207	1-126-964-11	ELECT	10uF	20%	50V
C208	1-126-964-11	ELECT	10uF	20%	50V
C209	1-162-970-11	CERAMIC CHIP	0.01uF	10%	25V
C210	1-162-957-11	CERAMIC CHIP	220PF	5%	50V
C211	1-104-665-11	ELECT	100uF	20%	10V
C212	1-126-964-11	ELECT	10uF	20%	50V
C213	1-126-964-11	ELECT	10uF	20%	50V
C214	1-126-961-11	ELECT	2.2uF	20%	50V
C227	1-162-957-11	CERAMIC CHIP	220PF	5%	50V
C301	1-164-004-11	CERAMIC CHIP	0.1uF	10%	25V
C302	1-124-584-00	ELECT	100uF	20%	10V
C303	1-104-665-11	ELECT	100uF	20%	10V
C321	1-104-665-11	ELECT	100uF	20%	10V
C327	1-104-665-11	ELECT	100uF	20%	10V
C328	1-164-004-11	CERAMIC CHIP	0.1uF	10%	25V
C329	1-163-021-91	CERAMIC CHIP	0.01uF	10%	50V
C331	1-104-665-11	ELECT	100uF	20%	10V
C340	1-124-233-11	ELECT	10uF	20%	16V
C341	1-124-233-11	ELECT	10uF	20%	16V
C342	1-124-233-11	ELECT	10uF	20%	16V
C401	1-117-850-11	ELECT	15000uF	20%	16V
C402	1-163-021-91	CERAMIC CHIP	0.01uF	10%	50V
C403	1-126-964-11	ELECT	10uF	20%	50V
C404	1-163-021-91	CERAMIC CHIP	0.01uF	10%	50V
C405	1-104-905-11	CAPACITOR	0.22F		5.5V
C406	1-163-059-91	CERAMIC CHIP	0.01uF	10%	50V
C407	1-126-157-11	ELECT	10uF	20%	16V
C408	1-126-157-11	ELECT	10uF	20%	16V
C409	1-163-021-91	CERAMIC CHIP	0.01uF	10%	50V
C410	1-126-935-11	ELECT	470uF	20%	16V
C411	1-163-021-91	CERAMIC CHIP	0.01uF	10%	50V

Ref. No.	Part No.	Description			Remark
C412	1-126-925-11	ELECT	470uF	20%	10V
C413	1-162-970-11	CERAMIC CHIP	0.01uF	10%	25V
C414	1-124-589-11	ELECT	47uF	20%	16V
C415	1-126-964-11	ELECT	10uF	20%	50V
C416	1-126-964-11	ELECT	10uF	20%	50V
C417	1-163-021-91	CERAMIC CHIP	0.01uF	10%	50V
C418	1-124-589-11	ELECT	47uF	20%	16V
C419	1-163-021-91	CERAMIC CHIP	0.01uF	10%	50V
C420	1-162-964-11	CERAMIC CHIP	0.001uF	10%	50V
C421	1-163-009-11	CERAMIC CHIP	0.001uF	10%	50V
C422	1-163-239-11	CERAMIC CHIP	33PF	5%	50V
C423	1-164-378-11	CERAMIC CHIP	30PF	5%	50V
C424	1-162-964-11	CERAMIC CHIP	0.001uF	10%	50V
C425	1-162-920-11	CERAMIC CHIP	27PF	5%	50V
C426	1-162-921-11	CERAMIC CHIP	33PF	5%	50V
C427	1-162-919-11	CERAMIC CHIP	22PF	5%	50V
C428	1-162-919-11	CERAMIC CHIP	22PF	5%	50V
C429	1-107-725-11	CERAMIC CHIP	0.1uF	10%	16V
C430	1-164-505-11	CERAMIC CHIP	2.2uF		16V
C431	1-124-584-00	ELECT	100uF	20%	10V
C432	1-163-021-91	CERAMIC CHIP	0.01uF	10%	50V
C433	1-162-964-11	CERAMIC CHIP	0.001uF	10%	50V
C434	1-162-964-11	CERAMIC CHIP	0.001uF	10%	50V
C435	1-162-964-11	CERAMIC CHIP	0.001uF	10%	50V
C436	1-162-964-11	CERAMIC CHIP	0.001uF	10%	50V
C437	1-162-964-11	CERAMIC CHIP	0.001uF	10%	50V
C438	1-162-964-11	CERAMIC CHIP	0.001uF	10%	50V
C439	1-162-964-11	CERAMIC CHIP	0.001uF	10%	50V
C440	1-162-970-11	CERAMIC CHIP	0.01uF	10%	25V
C441	1-162-970-11	CERAMIC CHIP	0.01uF	10%	25V
C442	1-162-964-11	CERAMIC CHIP	0.001uF	10%	50V
C443	1-162-964-11	CERAMIC CHIP	0.001uF	10%	50V
C444	1-162-964-11	CERAMIC CHIP	0.001uF	10%	50V
C445	1-162-964-11	CERAMIC CHIP	0.001uF	10%	50V
C446	1-162-964-11	CERAMIC CHIP	0.001uF	10%	50V
C447	1-162-964-11	CERAMIC CHIP	0.001uF	10%	50V
C448	1-162-970-11	CERAMIC CHIP	0.01uF	10%	25V
C449	1-162-964-11	CERAMIC CHIP	0.001uF	10%	50V
C450	1-162-964-11	CERAMIC CHIP	0.001uF	10%	50V
C451	1-162-970-11	CERAMIC CHIP	0.01uF	10%	25V
C452	1-162-970-11	CERAMIC CHIP	0.01uF	10%	25V
C453	1-162-970-11	CERAMIC CHIP	0.01uF	10%	25V
C455	1-162-964-11	CERAMIC CHIP	0.001uF	10%	50V
C456	1-162-964-11	CERAMIC CHIP	0.001uF	10%	50V
C457	1-162-927-11	CERAMIC CHIP	100PF	5%	50V
C458	1-163-251-11	CERAMIC CHIP	100PF	5%	50V
C459	1-162-964-11	CERAMIC CHIP	0.001uF	10%	50V
C460	1-162-964-11	CERAMIC CHIP	0.001uF	10%	50V
C461	1-162-964-11	CERAMIC CHIP	0.001uF	10%	50V
C462	1-162-964-11	CERAMIC CHIP	0.001uF	10%	50V
C463	1-162-964-11	CERAMIC CHIP	0.001uF	10%	50V
C464	1-162-964-11	CERAMIC CHIP	0.001uF	10%	50V
C465	1-162-964-11	CERAMIC CHIP	0.001uF	10%	50V
C466	1-164-315-11	CERAMIC CHIP	470PF	5%	50V
C467	1-162-964-11	CERAMIC CHIP	0.001uF	10%	50V
C468	1-163-009-11	CERAMIC CHIP	0.001uF	10%	50V
C469	1-163-009-11	CERAMIC CHIP	0.001uF	10%	50V
C470	1-162-964-11	CERAMIC CHIP	0.001uF	10%	50V
C471	1-162-927-11	CERAMIC CHIP	100PF	5%	50V
C472	1-162-927-11	CERAMIC CHIP	100PF	5%	50V
C473	1-162-927-11	CERAMIC CHIP	100PF	5%	50V
C475	1-162-964-11	CERAMIC CHIP	0.001uF	10%	50V
C476	1-162-927-11	CERAMIC CHIP	100PF	5%	50V
C477	1-162-964-11	CERAMIC CHIP	0.001uF	10%	50V
C478	1-162-964-11	CERAMIC CHIP	0.001uF	10%	50V
C479	1-162-923-11	CERAMIC CHIP	47PF	5%	50V
C480	1-162-964-11	CERAMIC CHIP	0.001uF	10%	50V
C483	1-163-009-11	CERAMIC CHIP	0.001uF	10%	50V
C484	1-162-964-11	CERAMIC CHIP	0.001uF	10%	50V
C485	1-162-964-11	CERAMIC CHIP	0.001uF	10%	50V
C486	1-164-315-11	CERAMIC CHIP	470PF	5%	50V
C487	1-164-315-11	CERAMIC CHIP	470PF	5%	50V
C488	1-162-964-11	CERAMIC CHIP	0.001uF	10%	50V
C489	1-162-964-11	CERAMIC CHIP	0.001uF	10%	50V
C490	1-162-964-11	CERAMIC CHIP	0.001uF	10%	50V
C491	1-162-964-11	CERAMIC CHIP	0.001uF	10%	50V
C492	1-126-961-11	ELECT	2.2uF	20%	50V
C493	1-163-235-11	CERAMIC CHIP	22PF	5%	50V
C494	1-163-263-11	CERAMIC CHIP	330PF	5%	50V
C495	1-163-233-11	CERAMIC CHIP	18PF	5%	50V
C496	1-128-551-11	ELECT	22uF	20%	25V
C497	1-163-021-91	CERAMIC CHIP	0.01uF	10%	50V
C498	1-163-021-91	CERAMIC CHIP	0.01uF	10%	50V
C499	1-126-935-11	ELECT	470uF	20%	6.3V
C500	1-163-135-00	CERAMIC CHIP	560PF	5%	50V
C501	1-162-970-11	CERAMIC CHIP	0.01uF	10%	25V
C502	1-162-970-11	CERAMIC CHIP	0.01uF	10%	25V
C503	1-162-970-11	CERAMIC CHIP	0.01uF	10%	25V
C504	1-162-970-11	CERAMIC CHIP	0.01uF	10%	25V
C505	1-162-964-11	CERAMIC CHIP	0.001uF	10%	50V
C506	1-162-964-11	CERAMIC CHIP	0.001uF	10%	50V
C507	1-162-970-11	CERAMIC CHIP	0.01uF	10%	25V
C508	1-162-964-11	CERAMIC CHIP	0.001uF	10%	50V
C510	1-163-009-11	CERAMIC CHIP	0.001uF	10%	50V
C511	1-163-009-11	CERAMIC CHIP	0.001uF	10%	50V
C512	1-163-009-11	CERAMIC CHIP	0.001uF	10%	50V
C513	1-162-964-11	CERAMIC CHIP	0.001uF	10%	50V
C514	1-163-009-11	CERAMIC CHIP	0.001uF	10%	50V
C515	1-163-021-91	CERAMIC CHIP	0.01uF	10%	50V
C516	1-163-009-11	CERAMIC CHIP	0.001uF	10%	50V
C517	1-163-021-91	CERAMIC CHIP	0.01uF	10%	50V
C518	1-163-021-91	CERAMIC CHIP	0.01uF	10%	50V
C519	1-163-021-91	CERAMIC CHIP	0.01uF	10%	50V
C520	1-162-964-11	CERAMIC CHIP	0.001uF	10%	50V
C521	1-164-505-11	CERAMIC CHIP	2.2uF		16V
C522	1-109-982-11	CERAMIC CHIP	1uF	10%	10V
C524	1-126-934-11	ELECT	220uF	20%	10V
C701	1-124-584-00	ELECT	100uF	20%	10V
C702	1-163-021-91	CERAMIC CHIP	0.01uF	10%	50V
C703	1-163-009-11	CERAMIC CHIP	0.001uF	10%	50V
C704	1-165-176-11	CERAMIC CHIP	0.047uF	10%	16V
C705	1-162-968-11	CERAMIC CHIP	0.0047uF	10%	50V
C706	1-162-970-11	CERAMIC CHIP	0.01uF	10%	25V
C707	1-126-925-11	ELECT	470uF	20%	10V
C708	1-107-826-91	CERAMIC CHIP	0.1uF	10%	16V
C709	1-162-969-11	CERAMIC CHIP	0.0068uF	10%	25V

MAIN

Ref. No.	Part No.	Description			Remark
C710	1-107-826-91	CERAMIC CHIP	0.1uF	10%	16V
C711	1-107-826-91	CERAMIC CHIP	0.1uF	10%	16V
C712	1-115-467-11	CERAMIC CHIP	0.22uF	10%	10V
C713	1-124-584-00	ELECT	100uF	20%	10V
C714	1-162-966-11	CERAMIC CHIP	0.0022uF	10%	50V
C715	1-107-826-91	CERAMIC CHIP	0.1uF	10%	16V
C716	1-126-157-11	ELECT	10uF	20%	16V
C717	1-107-826-91	CERAMIC CHIP	0.1uF	10%	16V
C718	1-107-826-91	CERAMIC CHIP	0.1uF	10%	16V
C720	1-119-660-11	TANTAL. CHIP	4.7uF	20%	6.3V
C721	1-162-970-11	CERAMIC CHIP	0.01uF	10%	25V
C722	1-164-677-11	CERAMIC CHIP	0.033uF	10%	16V
C723	1-164-677-11	CERAMIC CHIP	0.033uF	10%	16V
C724	1-162-915-11	CERAMIC CHIP	10PF	0.5PF	50V
C725	1-164-315-11	CERAMIC CHIP	470PF	5%	50V
C726	1-104-509-11	CERAMIC CHIP	0.018uF	10%	16V
C727	1-107-826-91	CERAMIC CHIP	0.1uF	10%	16V
C728	1-162-915-11	CERAMIC CHIP	10PF	0.5PF	50V
C729	1-162-969-11	CERAMIC CHIP	0.0068uF	10%	25V
C730	1-124-257-00	ELECT	2.2uF	20%	50V
C731	1-110-563-11	CERAMIC CHIP	0.068uF	10%	16V
C732	1-162-970-11	CERAMIC CHIP	0.01uF	10%	25V
C733	1-162-923-11	CERAMIC CHIP	47PF	5%	50V
C734	1-162-970-11	CERAMIC CHIP	0.01uF	10%	25V
C735	1-162-970-11	CERAMIC CHIP	0.01uF	10%	25V
C736	1-126-382-11	ELECT	100uF	20%	10V
C737	1-163-251-11	CERAMIC CHIP	100PF	5%	50V
C738	1-163-251-11	CERAMIC CHIP	100PF	5%	50V
C739	1-163-251-11	CERAMIC CHIP	100PF	5%	50V
C740	1-163-021-91	CERAMIC CHIP	0.01uF	10%	50V
C745	1-162-965-11	CERAMIC CHIP	0.0015uF	10%	50V
C746	1-162-957-11	CERAMIC CHIP	220PF	5%	50V
C747	1-164-489-11	CERAMIC CHIP	0.22uF	10%	16V
C748	1-165-176-11	CERAMIC CHIP	0.047uF	10%	16V
C749	1-162-970-11	CERAMIC CHIP	0.01uF	10%	25V
C750	1-163-021-91	CERAMIC CHIP	0.01uF	10%	50V
C751	1-163-021-91	CERAMIC CHIP	0.01uF	10%	50V
C752	1-162-970-11	CERAMIC CHIP	0.01uF	10%	25V
C753	1-162-970-11	CERAMIC CHIP	0.01uF	10%	25V
C755	1-163-251-11	CERAMIC CHIP	100PF	5%	50V
C756	1-163-263-11	CERAMIC CHIP	330PF	5%	50V
C757	1-162-970-11	CERAMIC CHIP	0.01uF	10%	25V
C758	1-163-251-11	CERAMIC CHIP	100PF	5%	50V
C759	1-162-970-11	CERAMIC CHIP	0.01uF	10%	25V
C760	1-163-251-11	CERAMIC CHIP	100PF	5%	50V
C761	1-163-251-11	CERAMIC CHIP	100PF	5%	50V
C762	1-107-682-11	CERAMIC CHIP	1uF	10%	16V
C763	1-163-251-11	CERAMIC CHIP	100PF	5%	50V
C764	1-162-970-11	CERAMIC CHIP	0.01uF	10%	25V
C765	1-162-970-11	CERAMIC CHIP	0.01uF	10%	25V
C767	1-163-229-11	CERAMIC CHIP	12PF	5%	50V
C768	1-163-229-11	CERAMIC CHIP	12PF	5%	50V
C770	1-124-584-00	ELECT	100uF	20%	10V
C771	1-124-584-00	ELECT	100uF	20%	10V
C773	1-124-233-11	ELECT	10uF	20%	16V
C774	1-124-233-11	ELECT	10uF	20%	16V
C775	1-163-021-91	CERAMIC CHIP	0.01uF	10%	50V
C776	1-127-688-21	TANTAL. CHIP	10uF	20%	6.3V
C777	1-126-382-11	ELECT	100uF	20%	10V
C778	1-162-970-11	CERAMIC CHIP	0.01uF	10%	25V
C779	1-162-927-11	CERAMIC CHIP	100PF	5%	50V
C780	1-162-957-11	CERAMIC CHIP	220PF	5%	50V
C781	1-162-970-11	CERAMIC CHIP	0.01uF	10%	25V
C783	1-109-982-11	CERAMIC CHIP	1uF	10%	10V
C784	1-163-021-91	CERAMIC CHIP	0.01uF	10%	50V
C787	1-163-021-91	CERAMIC CHIP	0.01uF	10%	50V
C788	1-126-176-11	ELECT	220uF	20%	10V
C790	1-162-927-11	CERAMIC CHIP	100PF	5%	50V
C791	1-109-982-11	CERAMIC CHIP	1uF	10%	10V
		< CONNECTOR >			
* CN305	1-580-171-11	PIN, CONNECTOR (PC BOARD) 10P			
* CN306	1-580-169-11	PIN, CONNECTOR (PC BOARD) 8P			
CN307	1-785-713-11	CONNECTOR, BOARD TO BOARD 4P			
* CN312	1-564-509-11	PLUG, CONNECTOR 6P			
* CN313	1-564-520-11	PLUG, CONNECTOR 5P			
* CN401	1-564-519-11	PLUG, CONNECTOR 4P			
CN402	1-580-168-01	PIN, CONNECTOR (PC BOARD) 7P			
CN404	1-580-168-11	PIN, CONNECTOR (PC BOARD) 7P			
CN405	1-770-533-31	CONNECTOR, FFC/FPC 26P			
CN406	1-568-852-11	CONNECTOR, FFC/FPC 9P			
CN407	1-569-906-11	SOCKET, CONNECTOR 11P			
CN408	1-580-168-11	PIN, CONNECTOR (PC BOARD) 7P			
CN409	1-770-516-31	CONNECTOR, FFC/FPC 8P			
* CN701	1-779-466-11	CONNECTOR, FFC/FPC 16P			
* CN702	1-580-167-11	PIN, CONNECTOR (PC BOARD) 6P			
* CN704	1-580-163-11	PIN, CONNECTOR (PC BOARD) 2P			
		< DIODE >			
D401	8-719-914-43	DIODE DAN202K			
D402	8-719-056-83	DIODE UDZ-TE-17-6.8B			
D405	8-719-988-61	DIODE 1SS355TE-17			
D406	8-719-988-61	DIODE 1SS355TE-17			
D407	8-719-988-61	DIODE 1SS355TE-17			
D701	8-719-988-61	DIODE 1SS355TE-17			
D702	8-719-988-61	DIODE 1SS355TE-17			
D703	8-719-056-76	DIODE UDZ-TE-17-3.6B			
D704	8-719-988-61	DIODE 1SS355TE-17			
		< FERRITE BEAD >			
FB101	1-216-295-00	METAL CHIP	0	5%	1/10W
FB201	1-216-295-00	METAL CHIP	0	5%	1/10W
FB301	1-216-295-00	METAL CHIP	0	5%	1/10W
FB401	1-216-296-00	METAL CHIP	0	5%	1/8W
FB402	1-469-125-21	FERRITE			
FB403	1-500-445-21	FERRITE			
FB404	1-469-125-21	FERRITE			
FB405	1-500-445-21	FERRITE			
FB406	1-500-445-21	FERRITE			
FB407	1-469-125-21	FERRITE			
FB408	1-500-445-21	FERRITE			
FB409	1-469-125-21	FERRITE			
FB410	1-469-125-21	FERRITE			
FB411	1-500-445-21	FERRITE			
FB412	1-469-185-11	FERRITE			

Ref. No.	Part No.	Description			Remark
FB413	1-469-185-11	FERRITE			
FB414	1-500-445-21	FERRITE			
FB415	1-500-445-21	FERRITE			
FB416	1-216-295-00	METAL CHIP	0	5%	1/10W
FB417	1-469-125-21	FERRITE			
FB418	1-469-125-21	FERRITE			
FB419	1-469-125-21	FERRITE			
FB420	1-469-125-21	FERRITE			
FB421	1-469-125-21	FERRITE			
FB422	1-469-125-21	FERRITE			
FB423	1-216-295-00	METAL CHIP	0	5%	1/10W
FB424	1-500-445-21	FERRITE			
FB425	1-216-295-00	METAL CHIP	0	5%	1/10W
FB426	1-216-864-11	METAL CHIP	0	5%	1/16W
FB427	1-216-295-00	METAL CHIP	0	5%	1/10W
FB428	1-216-295-00	METAL CHIP	0	5%	1/10W
FB429	1-216-295-00	METAL CHIP	0	5%	1/10W
FB430	1-216-295-00	METAL CHIP	0	5%	1/10W
FB431	1-216-295-00	METAL CHIP	0	5%	1/10W
FB432	1-216-864-11	METAL CHIP	0	5%	1/16W
FB433	1-216-295-00	METAL CHIP	0	5%	1/10W
FB434	1-216-864-11	METAL CHIP	0	5%	1/16W
FB701	1-216-864-11	METAL CHIP	0	5%	1/16W
FB703	1-500-234-22	FERRITE			
FB704	1-216-295-00	METAL CHIP	0	5%	1/10W
FB711	1-500-241-22	FERRITE			
FB712	1-216-295-00	METAL CHIP	0	5%	1/10W
FB713	1-216-295-00	METAL CHIP	0	5%	1/10W
FB714	1-216-295-00	METAL CHIP	0	5%	1/10W
FB762	1-216-864-11	METAL CHIP	0	5%	1/16W
		< IC >			
IC301	8-759-287-76	IC NJM2123M-T1			
IC302	8-759-636-55	IC M5218AFP			
IC401	8-759-361-69	IC BA17805T			
IC402	8-759-486-73	IC XC62FP3302PR			
IC403	8-759-493-53	IC S-81233SGUP-DQF-T1			
IC404	8-759-572-25	IC XC61AN2702PR			
IC405	8-752-906-70	IC CXP740096-019Q			
IC406	8-759-557-36	IC BU1924F-E2			
IC701	8-752-083-24	IC CXA2542AQ			
IC702	8-752-387-78	IC CXD3009Q			
IC703	8-759-591-63	IC BA6998FP-E2			
		< JACK >			
J301	1-785-368-11	JACK (🎧)			
		< JUMPER RESISTOR >			
JC404	1-216-296-00	METAL CHIP	0	5%	1/8W
JC405	1-216-296-00	METAL CHIP	0	5%	1/8W
JC406	1-216-296-00	METAL CHIP	0	5%	1/8W
JC407	1-216-295-00	METAL CHIP	0	5%	1/10W
		< COIL >			
L301	1-410-993-42	INDUCTOR CHIP	1uH		
L302	1-410-993-42	INDUCTOR CHIP	1uH		
L303	1-410-993-42	INDUCTOR CHIP	1uH		
L401	1-414-170-21	INDUCTOR CHIP	100uH		

Ref. No.	Part No.	Description			Remark
L701	1-412-973-11	INDUCTOR	0.33uH		
		< TRANSISTOR >			
Q101	8-729-920-31	TRANSISTOR	DTC343TK		
Q102	8-729-920-31	TRANSISTOR	DTC343TK		
Q103	8-729-920-31	TRANSISTOR	DTC343TK		
Q104	8-729-903-10	TRANSISTOR	FMW1		
Q106	8-729-920-31	TRANSISTOR	DTC343TK		
Q107	8-729-027-46	TRANSISTOR	DTC114YKA-T146		
Q201	8-729-920-31	TRANSISTOR	DTC343TK		
Q202	8-729-920-31	TRANSISTOR	DTC343TK		
Q203	8-729-920-31	TRANSISTOR	DTC343TK		
Q204	8-729-903-10	TRANSISTOR	FMW1		
Q206	8-729-920-31	TRANSISTOR	DTC343TK		
Q207	8-729-027-46	TRANSISTOR	DTC114YKA-T146		
Q301	8-729-920-41	TRANSISTOR	FMC3		
Q302	8-729-920-41	TRANSISTOR	FMC3		
Q303	8-729-920-41	TRANSISTOR	FMC3		
Q304	8-729-027-24	TRANSISTOR	DTA114TKA-T146		
Q305	8-729-027-24	TRANSISTOR	DTA114TKA-T146		
Q306	8-729-027-24	TRANSISTOR	DTA114TKA-T146		
Q311	8-729-920-41	TRANSISTOR	FMC3		
Q312	8-729-920-41	TRANSISTOR	FMC3		
Q401	8-729-920-41	TRANSISTOR	FMC3		
Q402	8-729-922-62	TRANSISTOR	2SD1760F5-TLQ		
Q403	8-729-920-41	TRANSISTOR	FMC3		
Q404	8-729-027-46	TRANSISTOR	DTC114YKA-T146		
Q405	8-729-903-46	TRANSISTOR	2SB1132-P		
Q406	8-729-903-10	TRANSISTOR	FMW1		
Q407	8-729-027-46	TRANSISTOR	DTC114YKA-T146		
Q408	8-729-027-46	TRANSISTOR	DTC114YKA-T146		
Q409	8-729-027-26	TRANSISTOR	DTA114YKA-T146		
Q410	8-729-903-46	TRANSISTOR	2SB1132-P		
Q411	8-729-027-46	TRANSISTOR	DTC114YKA-T146		
Q412	8-729-027-46	TRANSISTOR	DTC114YKA-T146		
Q413	8-729-903-46	TRANSISTOR	2SB1132-P		
Q701	8-729-101-07	TRANSISTOR	2SB798-DL		
Q702	8-729-027-29	TRANSISTOR	DTA123JKA-T146		
Q703	8-729-922-62	TRANSISTOR	2SD1760F5-TLQ		
		< RESISTOR >			
R101	1-216-845-11	METAL CHIP	100K	5%	1/16W
R102	1-216-097-91	RES,CHIP	100K	5%	1/10W
R103	1-216-845-11	METAL CHIP	100K	5%	1/16W
R104	1-216-864-11	METAL CHIP	0	5%	1/16W
R105	1-216-821-11	METAL CHIP	1K	5%	1/16W
R106	1-216-845-11	METAL CHIP	100K	5%	1/16W
R107	1-216-864-11	METAL CHIP	0	5%	1/16W
R108	1-216-821-11	METAL CHIP	1K	5%	1/16W
R109	1-216-230-00	RES,CHIP	22K	5%	1/8W
R110	1-216-821-11	METAL CHIP	1K	5%	1/16W
R111	1-216-025-91	RES,CHIP	100	5%	1/10W
R112	1-216-821-11	METAL CHIP	1K	5%	1/16W
R113	1-216-081-00	METAL CHIP	22K	5%	1/10W
R114	1-216-845-11	METAL CHIP	100K	5%	1/16W
R115	1-216-825-11	METAL CHIP	2.2K	5%	1/16W
R116	1-216-833-91	RES,CHIP	10K	5%	1/16W

MAIN

Ref. No.	Part No.	Description			Remark
R117	1-216-073-00	METAL CHIP	10K	5%	1/10W
R118	1-216-073-00	METAL CHIP	10K	5%	1/10W
R119	1-216-821-11	METAL CHIP	1K	5%	1/16W
R120	1-216-081-00	METAL CHIP	22K	5%	1/10W
R121	1-216-825-11	METAL CHIP	2.2K	5%	1/16W
R122	1-216-081-00	METAL CHIP	22K	5%	1/10W
R123	1-216-097-91	RES,CHIP	100K	5%	1/10W
R124	1-216-097-91	RES,CHIP	100K	5%	1/10W
R131	1-216-833-91	RES,CHIP	10K	5%	1/16W
R133	1-216-827-11	METAL CHIP	3.3K	5%	1/16W
R134	1-216-832-11	METAL CHIP	8.2K	5%	1/16W
R135	1-216-089-91	RES,CHIP	47K	5%	1/10W
R136	1-216-073-00	METAL CHIP	10K	5%	1/10W
R137	1-216-864-11	METAL CHIP	0	5%	1/16W
R139	1-216-821-11	METAL CHIP	1K	5%	1/16W
R140	1-216-821-11	METAL CHIP	1K	5%	1/16W
R141	1-216-864-11	METAL CHIP	0	5%	1/16W
R201	1-216-845-11	METAL CHIP	100K	5%	1/16W
R202	1-216-097-91	RES,CHIP	100K	5%	1/10W
R203	1-216-845-11	METAL CHIP	100K	5%	1/16W
R204	1-216-864-11	METAL CHIP	0	5%	1/16W
R205	1-216-821-11	METAL CHIP	1K	5%	1/16W
R206	1-216-845-11	METAL CHIP	100K	5%	1/16W
R207	1-216-864-11	METAL CHIP	0	5%	1/16W
R208	1-216-821-11	METAL CHIP	1K	5%	1/16W
R209	1-216-230-00	RES,CHIP	22K	5%	1/8W
R210	1-216-821-11	METAL CHIP	1K	5%	1/16W
R211	1-216-809-11	METAL CHIP	100	5%	1/16W
R212	1-216-821-11	METAL CHIP	1K	5%	1/16W
R213	1-216-081-00	METAL CHIP	22K	5%	1/10W
R214	1-216-845-11	METAL CHIP	100K	5%	1/16W
R215	1-216-825-11	METAL CHIP	2.2K	5%	1/16W
R216	1-216-833-91	RES,CHIP	10K	5%	1/16W
R217	1-216-073-00	METAL CHIP	10K	5%	1/10W
R218	1-216-073-00	METAL CHIP	10K	5%	1/10W
R219	1-216-821-11	METAL CHIP	1K	5%	1/16W
R220	1-216-081-00	METAL CHIP	22K	5%	1/10W
R221	1-216-825-11	METAL CHIP	2.2K	5%	1/16W
R222	1-216-081-00	METAL CHIP	22K	5%	1/10W
R223	1-216-097-91	RES,CHIP	100K	5%	1/10W
R224	1-216-097-91	RES,CHIP	100K	5%	1/10W
R231	1-216-833-91	RES,CHIP	10K	5%	1/16W
R233	1-216-827-11	METAL CHIP	3.3K	5%	1/16W
R234	1-216-832-11	METAL CHIP	8.2K	5%	1/16W
R235	1-216-089-91	RES,CHIP	47K	5%	1/10W
R236	1-216-073-00	METAL CHIP	10K	5%	1/10W
R237	1-216-864-11	METAL CHIP	0	5%	1/16W
R239	1-216-821-11	METAL CHIP	1K	5%	1/16W
R240	1-216-821-11	METAL CHIP	1K	5%	1/16W
R241	1-216-864-11	METAL CHIP	0	5%	1/16W
R301	1-216-017-91	RES,CHIP	47	5%	1/10W
R306	1-216-017-91	RES,CHIP	47	5%	1/10W
R307	1-216-833-91	RES,CHIP	10K	5%	1/16W
R308	1-216-833-91	RES,CHIP	10K	5%	1/16W
R317	1-216-073-00	METAL CHIP	10K	5%	1/10W
R318	1-216-073-00	METAL CHIP	10K	5%	1/10W
R323	1-216-073-00	METAL CHIP	10K	5%	1/10W
R326	1-216-017-91	RES,CHIP	47	5%	1/10W
R329	1-216-097-91	RES,CHIP	100K	5%	1/10W
R330	1-216-097-91	RES,CHIP	100K	5%	1/10W
R331	1-216-833-91	RES,CHIP	10K	5%	1/16W
R332	1-216-833-91	RES,CHIP	10K	5%	1/16W
R337	1-216-097-91	RES,CHIP	100K	5%	1/10W
R347	1-216-089-91	RES,CHIP	47K	5%	1/10W
R401	1-216-805-11	METAL CHIP	47	5%	1/16W
R402	1-216-041-00	METAL CHIP	470	5%	1/10W
R403	1-216-049-91	RES,CHIP	1K	5%	1/10W
R404	1-216-839-11	METAL CHIP	33K	5%	1/16W
R405	1-216-833-91	RES,CHIP	10K	5%	1/16W
R406	1-216-821-11	METAL CHIP	1K	5%	1/16W
R407	1-216-049-91	RES,CHIP	1K	5%	1/10W
R408	1-216-809-11	METAL CHIP	100	5%	1/16W
R409	1-216-833-91	RES,CHIP	10K	5%	1/16W
R410	1-216-833-91	RES,CHIP	10K	5%	1/16W
R411	1-216-833-91	RES,CHIP	10K	5%	1/16W
R412	1-216-833-91	RES,CHIP	10K	5%	1/16W
R413	1-216-829-11	METAL CHIP	4.7K	5%	1/16W
R414	1-216-817-11	METAL CHIP	470	5%	1/16W
R415	1-216-817-11	METAL CHIP	470	5%	1/16W
R416	1-216-833-91	RES,CHIP	10K	5%	1/16W
R417	1-216-821-11	METAL CHIP	1K	5%	1/16W
R418	1-216-821-11	METAL CHIP	1K	5%	1/16W
R419	1-216-821-11	METAL CHIP	1K	5%	1/16W
R420	1-216-821-11	METAL CHIP	1K	5%	1/16W
R421	1-216-821-11	METAL CHIP	1K	5%	1/16W
R422	1-216-821-11	METAL CHIP	1K	5%	1/16W
R423	1-216-821-11	METAL CHIP	1K	5%	1/16W
R424	1-216-821-11	METAL CHIP	1K	5%	1/16W
R425	1-216-821-11	METAL CHIP	1K	5%	1/16W
R426	1-216-821-11	METAL CHIP	1K	5%	1/16W
R427	1-216-821-11	METAL CHIP	1K	5%	1/16W
R428	1-216-833-91	RES,CHIP	10K	5%	1/16W
R429	1-216-821-11	METAL CHIP	1K	5%	1/16W
R430	1-216-821-11	METAL CHIP	1K	5%	1/16W
R431	1-216-821-11	METAL CHIP	1K	5%	1/16W
R432	1-216-821-11	METAL CHIP	1K	5%	1/16W
R433	1-216-821-11	METAL CHIP	1K	5%	1/16W
R434	1-216-821-11	METAL CHIP	1K	5%	1/16W
R435	1-216-841-11	METAL CHIP	47K	5%	1/16W
R436	1-216-829-11	METAL CHIP	4.7K	5%	1/16W
R437	1-216-829-11	METAL CHIP	4.7K	5%	1/16W
R438	1-216-069-00	METAL CHIP	6.8K	5%	1/10W
R439	1-216-821-11	METAL CHIP	1K	5%	1/16W
R440	1-216-821-11	METAL CHIP	1K	5%	1/16W
R441	1-216-829-11	METAL CHIP	4.7K	5%	1/16W
R442	1-216-049-91	RES,CHIP	1K	5%	1/10W
R443	1-216-817-11	METAL CHIP	470	5%	1/16W
R444	1-216-817-11	METAL CHIP	470	5%	1/16W
R445	1-216-821-11	METAL CHIP	1K	5%	1/16W
R446	1-216-821-11	METAL CHIP	1K	5%	1/16W
R447	1-216-833-91	RES,CHIP	10K	5%	1/16W
R448	1-216-821-11	METAL CHIP	1K	5%	1/16W
R449	1-216-821-11	METAL CHIP	1K	5%	1/16W
R450	1-216-821-11	METAL CHIP	1K	5%	1/16W
R451	1-216-821-11	METAL CHIP	1K	5%	1/16W

Ref. No.	Part No.	Description			Remark
R452	1-216-833-91	RES,CHIP	10K	5%	1/16W
R453	1-216-821-11	METAL CHIP	1K	5%	1/16W
R454	1-216-817-11	METAL CHIP	470	5%	1/16W
R455	1-216-817-11	METAL CHIP	470	5%	1/16W
R456	1-216-821-11	METAL CHIP	1K	5%	1/16W
R457	1-216-041-00	METAL CHIP	470	5%	1/10W
R458	1-216-041-00	METAL CHIP	470	5%	1/10W
R459	1-216-833-91	RES,CHIP	10K	5%	1/16W
R460	1-216-821-11	METAL CHIP	1K	5%	1/16W
R461	1-216-821-11	METAL CHIP	1K	5%	1/16W
R462	1-216-821-11	METAL CHIP	1K	5%	1/16W
R463	1-216-809-11	METAL CHIP	100	5%	1/16W
R464	1-216-821-11	METAL CHIP	1K	5%	1/16W
R465	1-216-809-11	METAL CHIP	100	5%	1/16W
R466	1-216-837-11	METAL CHIP	22K	5%	1/16W
R467	1-216-817-11	METAL CHIP	470	5%	1/16W
R468	1-216-833-91	RES,CHIP	10K	5%	1/16W
R470	1-216-821-11	METAL CHIP	1K	5%	1/16W
R471	1-216-049-91	RES,CHIP	1K	5%	1/10W
R472	1-216-839-11	METAL CHIP	33K	5%	1/16W
R473	1-216-049-91	RES,CHIP	1K	5%	1/10W
R474	1-216-825-11	METAL CHIP	2.2K	5%	1/16W
R475	1-216-821-11	METAL CHIP	1K	5%	1/16W
R476	1-216-821-11	METAL CHIP	1K	5%	1/16W
R477	1-216-833-91	RES,CHIP	10K	5%	1/16W
R478	1-216-821-11	METAL CHIP	1K	5%	1/16W
R479	1-216-821-11	METAL CHIP	1K	5%	1/16W
R480	1-216-821-11	METAL CHIP	1K	5%	1/16W
R481	1-216-821-11	METAL CHIP	1K	5%	1/16W
R482	1-216-837-11	METAL CHIP	22K	5%	1/16W
R483	1-216-841-11	METAL CHIP	47K	5%	1/16W
R484	1-216-841-11	METAL CHIP	47K	5%	1/16W
R485	1-216-065-91	RES,CHIP	4.7K	5%	1/10W
R486	1-216-829-11	METAL CHIP	4.7K	5%	1/16W
R487	1-216-829-11	METAL CHIP	4.7K	5%	1/16W
R488	1-216-065-91	RES,CHIP	4.7K	5%	1/10W
R489	1-216-085-00	METAL CHIP	33K	5%	1/10W
R490	1-216-081-00	METAL CHIP	22K	5%	1/10W
R491	1-216-837-11	METAL CHIP	22K	5%	1/16W
R492	1-216-839-11	METAL CHIP	33K	5%	1/16W
R493	1-216-821-11	METAL CHIP	1K	5%	1/16W
R494	1-216-821-11	METAL CHIP	1K	5%	1/16W
R495	1-216-821-11	METAL CHIP	1K	5%	1/16W
R496	1-216-864-11	METAL CHIP	0	5%	1/16W
R497	1-216-073-00	METAL CHIP	10K	5%	1/10W
R498	1-216-061-00	METAL CHIP	3.3K	5%	1/10W
R499	1-216-061-00	METAL CHIP	3.3K	5%	1/10W
R500	1-216-296-00	METAL CHIP	0	5%	1/8W
R501	1-216-833-91	RES,CHIP	10K	5%	1/16W
R502	1-216-833-91	RES,CHIP	10K	5%	1/16W
R503	1-216-833-91	RES,CHIP	10K	5%	1/16W
R504	1-216-073-00	METAL CHIP	10K	5%	1/10W
R505	1-216-821-11	METAL CHIP	1K	5%	1/16W
R506	1-216-821-11	METAL CHIP	1K	5%	1/16W
R507	1-216-821-11	METAL CHIP	1K	5%	1/16W
R700	1-216-835-11	METAL CHIP	15K	5%	1/16W
R701	1-216-833-91	RES,CHIP	10K	5%	1/16W
R703	1-216-855-11	METAL CHIP	680K	5%	1/16W
R706	1-216-847-11	METAL CHIP	150K	5%	1/16W
R710	1-218-273-11	RES,CHIP	510K	5%	1/16W
R711	1-216-847-11	METAL CHIP	150K	5%	1/16W
R712	1-216-845-11	METAL CHIP	100K	5%	1/16W
R713	1-216-841-11	METAL CHIP	47K	5%	1/16W
R714	1-216-841-11	METAL CHIP	47K	5%	1/16W
R715	1-216-847-11	METAL CHIP	150K	5%	1/16W
R716	1-216-845-11	METAL CHIP	100K	5%	1/16W
R718	1-216-817-11	RES,CHIP	470	5%	1/16W
R719	1-216-041-00	METAL CHIP	470	5%	1/10W
R720	1-216-817-11	METAL CHIP	470	5%	1/16W
R721	1-216-845-11	METAL CHIP	100K	5%	1/16W
R722	1-216-845-11	METAL CHIP	100K	5%	1/16W
R723	1-216-845-11	METAL CHIP	100K	5%	1/16W
R724	1-216-845-11	METAL CHIP	100K	5%	1/16W
R725	1-216-845-11	METAL CHIP	100K	5%	1/16W
R726	1-216-845-11	METAL CHIP	100K	5%	1/16W
R731	1-216-835-11	METAL CHIP	15K	5%	1/16W
R732	1-216-839-11	METAL CHIP	33K	5%	1/16W
R733	1-216-845-11	METAL CHIP	100K	5%	1/16W
R734	1-216-001-00	METAL CHIP	10	5%	1/10W
R735	1-216-833-91	RES,CHIP	10K	5%	1/16W
R741	1-216-849-11	METAL CHIP	220K	5%	1/16W
R742	1-216-847-11	METAL CHIP	150K	5%	1/16W
R743	1-216-847-11	METAL CHIP	150K	5%	1/16W
R745	1-216-851-11	METAL CHIP	330K	5%	1/16W
R750	1-216-827-11	METAL CHIP	3.3K	5%	1/16W
R751	1-216-835-11	METAL CHIP	15K	5%	1/16W
R752	1-216-839-11	METAL CHIP	33K	5%	1/16W
R753	1-216-821-11	METAL CHIP	1K	5%	1/16W
R754	1-216-837-11	METAL CHIP	22K	5%	1/16W
R755	1-216-841-11	METAL CHIP	47K	5%	1/16W
R756	1-216-833-91	RES,CHIP	10K	5%	1/16W
R758	1-216-829-11	METAL CHIP	4.7K	5%	1/16W
R760	1-216-097-91	RES,CHIP	100K	5%	1/10W
R762	1-216-853-11	METAL CHIP	470K	5%	1/16W
R763	1-216-827-11	METAL CHIP	3.3K	5%	1/16W
R764	1-216-061-00	METAL CHIP	3.3K	5%	1/10W
R765	1-216-833-91	RES,CHIP	10K	5%	1/16W
R766	1-216-857-11	METAL CHIP	1M	5%	1/16W
R767	1-216-833-91	RES,CHIP	10K	5%	1/16W
R768	1-216-833-91	RES,CHIP	10K	5%	1/16W
R769	1-216-041-00	METAL CHIP	470	5%	1/10W
R770	1-216-821-11	METAL CHIP	1K	5%	1/16W
R771	1-216-864-11	METAL CHIP	0	5%	1/16W
R772	1-216-033-00	METAL CHIP	220	5%	1/10W
R775	1-216-864-11	METAL CHIP	0	5%	1/16W
R776	1-216-073-00	METAL CHIP	10K	5%	1/10W
R777	1-216-821-11	METAL CHIP	1K	5%	1/16W
R778	1-216-821-11	METAL CHIP	1K	5%	1/16W
R780	1-216-821-11	METAL CHIP	1K	5%	1/16W
R781	1-216-073-00	METAL CHIP	10K	5%	1/10W
R786	1-216-295-00	METAL CHIP	0	5%	1/10W
R787	1-216-821-11	METAL CHIP	1K	5%	1/16W
R788	1-216-821-11	METAL CHIP	1K	5%	1/16W
R789	1-216-809-11	METAL CHIP	100	5%	1/16W
R790	1-216-049-91	RES,CHIP	1K	5%	1/10W

MAIN **MOTOR** **POWER**

Ref. No.	Part No.	Description			Remark
R791	1-216-821-11	METAL CHIP	1K	5%	1/16W
R792	1-216-809-11	METAL CHIP	100	5%	1/16W
R793	1-216-821-11	METAL CHIP	1K	5%	1/16W
R794	1-216-817-11	METAL CHIP	470	5%	1/16W
R795	1-216-813-11	METAL CHIP	220	5%	1/16W
R796	1-216-821-11	METAL CHIP	1K	5%	1/16W
R797	1-216-821-11	METAL CHIP	1K	5%	1/16W
R798	1-216-821-11	METAL CHIP	1K	5%	1/16W
R799	1-216-821-11	METAL CHIP	1K	5%	1/16W
		< VIBRATOR >			
X401	1-781-050-21	VIBRATOR, CERAMIC (8MHz)			
X402	1-767-697-11	VIBRATOR, CRYSTAL (32kHz)			
X403	1-760-556-11	VIBRATOR, CRYSTAL (4.332MHz)			
X701	1-767-226-11	VIBRATOR, CRYSTAL (16.9344MHz)			
**********					
*	A-3323-155-A	MOTOR BOARD, COMPLETE			
		**********			
		< CAPACITOR >			
C789	1-107-725-11	CERAMIC CHIP	0.1uF	10%	16V
C795	1-126-925-11	ELECT	470uF	20%	10V
C796	1-163-021-91	CERAMIC CHIP	0.01uF	10%	50V
C797	1-163-021-91	CERAMIC CHIP	0.01uF	10%	50V
		< CONNECTOR >			
* CN712	1-580-154-11	PIN, CONNECTOR (PC BOARD) 2P			
		< DIODE >			
D761	8-719-988-61	DIODE 1SS355TE-17			
D762	8-719-988-61	DIODE 1SS355TE-17			
		< IC >			
IC711	8-759-565-65	IC BA6289F-E2			
		< COIL >			
L711	1-414-743-21	INDUCTOR	47uH		
L712	1-414-743-21	INDUCTOR	47uH		
		< TRANSISTOR >			
Q761	8-729-028-66	TRANSISTOR DTC115EKA-T146			
Q762	8-729-027-26	TRANSISTOR DTA114YKA-T146			
Q763	8-729-027-46	TRANSISTOR DTC114YKA-T146			
Q764	8-729-903-46	TRANSISTOR 2SB1132-P			
Q765	8-729-027-46	TRANSISTOR DTC114YKA-T146			
Q766	8-729-027-46	TRANSISTOR DTC114YKA-T146			
		< RESISTOR >			
R728	1-216-071-00	METAL CHIP	8.2K	5%	1/10W
R744	1-216-081-00	METAL CHIP	22K	5%	1/10W
R746	1-216-073-00	METAL CHIP	10K	5%	1/10W
R747	1-216-081-00	METAL CHIP	22K	5%	1/10W
R748	1-216-079-00	METAL CHIP	18K	5%	1/10W
R749	1-216-079-00	METAL CHIP	18K	5%	1/10W
R759	1-216-089-91	RES,CHIP	47K	5%	1/10W
⚠R761	1-212-954-11	FUSIBLE	6.8	5%	1/2W F
R779	1-216-041-00	METAL CHIP	470	5%	1/10W

Ref. No.	Part No.	Description			Remark
		< SWITCH >			
S761	1-572-126-21	SWITCH, PUSH (1 KEY) (OPEN)			
S762	1-572-126-21	SWITCH, PUSH (1 KEY) (CLOSE)			
**********					
*	1-671-313-21	POWER BOARD			
		**********			
	1-533-217-31	HOLDER, FUSE			
*	3-028-880-01	HEAT SINK (DIODE)			
	7-685-646-79	SCREW +BVTP 3X8 TYPE2 N-S			
		< CAPACITOR >			
C901	1-163-037-11	CERAMIC CHIP	0.022uF	10%	25V
C902	1-163-037-11	CERAMIC CHIP	0.022uF	10%	25V
C903	1-163-037-11	CERAMIC CHIP	0.022uF	10%	25V
C904	1-163-037-11	CERAMIC CHIP	0.022uF	10%	25V
C905	1-163-037-11	CERAMIC CHIP	0.022uF	10%	25V
C906	1-163-037-11	CERAMIC CHIP	0.022uF	10%	25V
C907	1-163-037-11	CERAMIC CHIP	0.022uF	10%	25V
C908	1-163-037-11	CERAMIC CHIP	0.022uF	10%	25V
C909	1-163-037-11	CERAMIC CHIP	0.022uF	10%	25V
C910	1-163-037-11	CERAMIC CHIP	0.022uF	10%	25V
C911	1-163-037-11	CERAMIC CHIP	0.022uF	10%	25V
C912	1-163-037-11	CERAMIC CHIP	0.022uF	10%	25V
C913	1-163-021-91	CERAMIC CHIP	0.01uF	10%	50V
C914	1-163-021-91	CERAMIC CHIP	0.01uF	10%	50V
C916	1-163-021-91	CERAMIC CHIP	0.01uF	10%	50V
C917	1-163-021-91	CERAMIC CHIP	0.01uF	10%	50V
		< CONNECTOR >			
* CN901	1-564-522-11	PLUG, CONNECTOR 7P			
* CN902	1-580-154-11	PIN, CONNECTOR (PC BOARD) 2P			
* CN904	1-564-519-11	PLUG, CONNECTOR 4P			
		< DIODE >			
D901	8-719-302-38	DIODE RBV-602-01			
D903	8-719-510-53	DIODE D4SB60L			
D904	8-719-914-43	DIODE DAN202K			
D905	8-719-970-02	DIODE 1SR139-400			
D906	8-719-970-02	DIODE 1SR139-400			
D907	8-719-970-02	DIODE 1SR139-400			
D908	8-719-970-02	DIODE 1SR139-400			
		< FUSE >			
⚠F901	1-532-235-00	FUSE (T0.315AL/250V)			
⚠F902	1-532-299-00	FUSE (T5AL/250V)			
⚠F903	1-532-066-00	FUSE (T0.4AL/250V)			
⚠F904	1-532-388-51	FUSE (T2AL/250V)			
		< JACK >			
⚠J901	1-526-838-11	INLET, AC 2P (~ AC IN)			
		< RESISTOR >			
R901	1-216-073-00	METAL CHIP	10K	5%	1/10W
R902	1-216-057-00	METAL CHIP	2.2K	5%	1/10W

The components identified by mark ⚠ or dotted line with mark ⚠ are critical for safety.
Replace only with part number specified.

Ref. No.	Part No.	Description			Remark
		< TRANSFORMER >			
⚠T901	1-433-781-11	TRANSFORMER, POWER			
⚠T902	1-433-630-11	TRANSFORMER, LINE FILTER (LFT)			
**********					
*	1-661-774-11	SW BOARD			
		*********			
		< CONNECTOR >			
CN601	1-770-698-11	CONNECTOR, FFC/FPC 15P			
CN602	1-778-638-21	PIN, CONNECTOR (PC BOARD) 2P			
CN603	1-778-638-21	PIN, CONNECTOR (PC BOARD) 2P			
		< SWITCH >			
S681	1-572-467-61	SWITCH, PUSH (1 KEY) (LIMIT IN)			
S682	1-692-377-31	SWITCH, PUSH (1 KEY) (REFLECT)			
S683	1-692-847-21	SWITCH, PUSH (1 KEY) (PROTECT)			
S685	1-572-467-61	SWITCH, PUSH (1 KEY) (CHUCKING IN)			
S686	1-762-621-21	SWITCH, PUSH (1 KEY) (PACK OUT)			
S687	1-572-688-11	SWITCH, PUSH (1 KEY) (PB POSITION)			
S688	1-762-621-21	SWITCH, PUSH (1 KEY) (REC POSITION)			
**********					
*	A-3323-154-A	TUNER BOARD, COMPLETE			
		**********			
		< CAPACITOR >			
C1	1-163-243-11	CERAMIC CHIP	47PF	5%	50V
C2	1-163-113-00	CERAMIC CHIP	68PF	5%	50V
C3	1-163-037-11	CERAMIC CHIP	0.022uF	10%	25V
C4	1-163-132-00	CERAMIC CHIP	430PF	5%	50V
C5	1-163-263-11	CERAMIC CHIP	330PF	5%	50V
C6	1-163-231-11	CERAMIC CHIP	15PF	5%	50V
C7	1-163-037-11	CERAMIC CHIP	0.022uF	10%	25V
C8	1-163-021-91	CERAMIC CHIP	0.01uF	10%	50V
C13	1-163-021-91	CERAMIC CHIP	0.01uF	10%	50V
C14	1-162-959-11	CERAMIC CHIP	330PF	5%	50V
C15	1-163-259-91	CERAMIC CHIP	220PF	5%	50V
C16	1-163-263-11	CERAMIC CHIP	330PF	5%	50V
C17	1-164-344-11	CERAMIC CHIP	0.068uF	10%	25V
C18	1-164-345-11	CERAMIC CHIP	0.082uF	10%	25V
C19	1-126-964-11	ELECT	10uF	20%	50V
C20	1-126-963-11	ELECT	4.7uF	20%	50V
C21	1-104-665-11	ELECT	100uF	20%	10V
C22	1-163-021-91	CERAMIC CHIP	0.01uF	10%	50V
C23	1-163-021-91	CERAMIC CHIP	0.01uF	10%	50V
C24	1-163-986-00	CERAMIC CHIP	0.027uF	10%	25V
C25	1-163-986-00	CERAMIC CHIP	0.027uF	10%	25V
C26	1-126-960-11	ELECT	1uF	20%	50V
C27	1-126-960-11	ELECT	1uF	20%	50V
C28	1-162-964-11	CERAMIC CHIP	0.001uF	10%	50V
C29	1-162-964-11	CERAMIC CHIP	0.001uF	10%	50V
C30	1-162-970-11	CERAMIC CHIP	0.01uF	10%	25V
C31	1-163-227-11	CERAMIC CHIP	10PF	0.5PF	50V
C32	1-163-227-11	CERAMIC CHIP	10PF	0.5PF	50V
C33	1-137-194-91	FILM	0.47uF	5%	50V
C34	1-126-935-11	ELECT	470uF	20%	6.3V
C35	1-162-970-11	CERAMIC CHIP	0.01uF	10%	25V
C36	1-162-964-11	CERAMIC CHIP	0.001uF	10%	50V
C37	1-162-964-11	CERAMIC CHIP	0.001uF	10%	50V
C38	1-164-505-11	CERAMIC CHIP	2.2uF		16V
C39	1-162-970-11	CERAMIC CHIP	0.01uF	10%	25V
C40	1-126-934-11	ELECT	220uF	20%	16V
C41	1-162-970-11	CERAMIC CHIP	0.01uF	10%	25V
C42	1-162-970-11	CERAMIC CHIP	0.01uF	10%	25V
C43	1-163-021-91	CERAMIC CHIP	0.01uF	10%	50V
C44	1-164-227-11	CERAMIC CHIP	0.022uF	10%	25V
C45	1-163-133-00	CERAMIC CHIP	470PF	5%	50V
C46	1-164-345-11	CERAMIC CHIP	0.082uF	10%	25V
C47	1-163-021-91	CERAMIC CHIP	0.01uF	10%	50V
C48	1-162-970-11	CERAMIC CHIP	0.01uF	10%	25V
C49	1-126-934-11	ELECT	220uF	20%	10V
C50	1-163-021-91	CERAMIC CHIP	0.01uF	10%	50V
C51	1-163-263-11	CERAMIC CHIP	330PF	5%	50V
C53	1-163-021-91	CERAMIC CHIP	0.01uF	10%	50V
C54	1-162-968-11	CERAMIC CHIP	0.0047uF	10%	50V
C55	1-164-315-11	CERAMIC CHIP	470PF	5%	50V
C56	1-164-315-11	CERAMIC CHIP	470PF	5%	50V
C58	1-163-021-91	CERAMIC CHIP	0.01uF	10%	50V
C61	1-162-957-11	CERAMIC CHIP	220PF	5%	50V
C62	1-163-205-00	CERAMIC CHIP	0.001uF	5%	50V
C63	1-163-205-00	CERAMIC CHIP	0.001uF	5%	50V
C64	1-163-009-11	CERAMIC CHIP	0.001uF	10%	50V
C65	1-126-964-11	ELECT	10uF	20%	50V
C67	1-163-243-11	CERAMIC CHIP	47PF	5%	50V
C68	1-163-038-91	CERAMIC CHIP	0.1uF		25V
C71	1-163-021-91	CERAMIC CHIP	0.01uF	10%	50V
		< FILTER >			
CF1	1-579-762-11	VIBRATOR, CERAMIC			
CF2	1-781-407-11	FILTER, CERAMIC			
CF3	1-781-407-11	FILTER, CERAMIC			
CF4	1-781-407-11	FILTER, CERAMIC			
CF5	1-760-125-11	DISCRIMINATOR, CERAMIC			
		< COMPOSITION CIRCUIT BLOCK >			
CFT1	1-233-885-11	ENCAPSULATED COMPONENT (MW/LW IF)			
		< TRIMMER >			
CT1	1-141-459-11	CAP, TRIMMER (SEAL TYPE) 45PF (LW TRACKING)			
CT2	1-141-410-11	CAP, ADJ 10PF (MW TRACKING)			
CT3	1-141-459-11	CAP, TRIMMER (SEAL TYPE) 45PF (LW FREQUENCY COVERAGE)			
CT4	1-141-410-11	CAP, ADJ 10PF (MW FREQUENCY COVERAGE)			
		< DIODE >			
D1	8-719-049-75	DIODE KV1520TL00			
D4	8-719-988-61	DIODE 1SS355TE-17			
D5	8-719-988-61	DIODE 1SS355TE-17			
D6	8-719-988-61	DIODE 1SS355TE-17			
D7	8-719-988-61	DIODE 1SS355TE-17			
D8	8-719-988-61	DIODE 1SS355TE-17			
D9	8-719-988-61	DIODE 1SS355TE-17			
D10	8-719-988-61	DIODE 1SS355TE-17			
D11	8-719-988-61	DIODE 1SS355TE-17			
D12	8-719-988-61	DIODE 1SS355TE-17			

TUNER

Ref. No.	Part No.	Description			Remark
		< FERRITE BEAD >			
FB1	1-414-598-11	INDUCTOR CHIP			
FB2	1-414-598-11	INDUCTOR CHIP			
FB4	1-414-598-11	INDUCTOR CHIP			
FB5	1-414-598-11	INDUCTOR CHIP			
FB6	1-414-598-11	INDUCTOR CHIP			
FB7	1-414-598-11	INDUCTOR CHIP			
FB9	1-216-295-00	METAL CHIP	0	5%	1/10W
		< IC >			
IC1	8-759-386-02	IC TA2008AN			
IC2	8-759-483-40	IC LC72137M-TLM			
		< JUMPER RESISTOR >			
JC1	1-216-295-00	METAL CHIP	0	5%	1/10W
JC5	1-216-295-00	METAL CHIP	0	5%	1/10W
JC6	1-216-295-00	METAL CHIP	0	5%	1/10W
JC7	1-216-295-00	METAL CHIP	0	5%	1/10W
		< COIL >			
L1	1-414-170-11	INDUCTOR CHIP 100uH			
L2	1-410-993-11	INDUCTOR CHIP 1uH			
L3	1-416-129-11	COIL, LW ANT (LW TRACKING)			
L4	1-416-991-11	COIL, AM ANT (MW TRACKING)			
L5	1-411-959-11	COIL, AM OSC (MW FREQUENCY COVERAGE)			
L9	1-233-306-31	ENCAPSULATED COMPONENT (FM IF)			
L10	1-500-284-21	INDUCTOR CHIP			
		< TRANSISTOR >			
Q3	8-729-119-32	TRANSISTOR 2SK193			
Q4	8-729-920-31	TRANSISTOR DTC343TK			
Q5	8-729-920-38	TRANSISTOR 2SC2059K-N			
Q6	8-729-931-02	TRANSISTOR 2SC2413KQ			
Q7	8-729-120-28	TRANSISTOR 2SC1623-L5L6			
Q8	1-801-806-11	TRANSISTOR DTC144EKA-T146			
Q9	8-729-904-07	TRANSISTOR FMG2			
Q10	8-729-920-31	TRANSISTOR DTC343TK			
Q11	8-729-920-41	TRANSISTOR FMC3			
Q12	8-729-039-73	TRANSISTOR FMA5A-T148			
Q13	8-729-901-04	TRANSISTOR DTA114EK			
Q14	8-729-931-02	TRANSISTOR 2SC2413KQ			
Q15	8-729-920-31	TRANSISTOR DTC343TK			
		< RESISTOR >			
R2	1-216-037-00	METAL CHIP	330	5%	1/10W
R3	1-216-049-91	RES,CHIP	1K	5%	1/10W
R4	1-216-057-00	METAL CHIP	2.2K	5%	1/10W
R5	1-216-065-91	RES,CHIP	4.7K	5%	1/10W
R6	1-216-073-00	METAL CHIP	10K	5%	1/10W
R7	1-216-097-91	RES,CHIP	100K	5%	1/10W
R8	1-216-065-91	RES,CHIP	4.7K	5%	1/10W
R9	1-216-077-00	METAL CHIP	15K	5%	1/10W
R16	1-216-105-91	RES,CHIP	220K	5%	1/10W
R17	1-216-059-00	METAL CHIP	2.7K	5%	1/10W
R18	1-216-049-91	RES,CHIP	1K	5%	1/10W
R19	1-216-081-00	METAL CHIP	22K	5%	1/10W
R20	1-216-825-11	METAL CHIP	2.2K	5%	1/16W
R21	1-216-017-91	RES,CHIP	47	5%	1/10W
R22	1-216-041-00	METAL CHIP	470	5%	1/10W
R23	1-216-049-91	RES,CHIP	1K	5%	1/10W
R25	1-216-023-00	METAL CHIP	82	5%	1/10W
R26	1-216-829-11	METAL CHIP	4.7K	5%	1/16W
R27	1-216-837-11	METAL CHIP	22K	5%	1/16W
R28	1-216-833-91	RES,CHIP	10K	5%	1/16W
R29	1-216-821-11	METAL CHIP	1K	5%	1/16W
R30	1-216-047-91	RES,CHIP	820	5%	1/10W
R31	1-216-073-00	METAL CHIP	10K	5%	1/10W
R33	1-216-073-00	METAL CHIP	10K	5%	1/10W
R35	1-216-049-91	RES,CHIP	1K	5%	1/10W
R36	1-216-821-11	METAL CHIP	1K	5%	1/16W
R37	1-216-833-91	RES,CHIP	10K	5%	1/16W
R38	1-216-833-91	RES,CHIP	10K	5%	1/16W
R39	1-216-821-11	METAL CHIP	1K	5%	1/16W
R40	1-216-821-11	METAL CHIP	1K	5%	1/16W
R41	1-216-829-11	METAL CHIP	4.7K	5%	1/16W
R42	1-216-809-11	METAL CHIP	100	5%	1/16W
R43	1-216-057-00	METAL CHIP	2.2K	5%	1/10W
R46	1-216-864-11	METAL CHIP	0	5%	1/16W
R47	1-216-864-11	METAL CHIP	0	5%	1/16W
R48	1-216-841-11	METAL CHIP	47K	5%	1/16W
R49	1-216-841-11	METAL CHIP	47K	5%	1/16W
R50	1-216-841-11	METAL CHIP	47K	5%	1/16W
R51	1-216-825-11	METAL CHIP	2.2K	5%	1/16W
R52	1-216-821-11	METAL CHIP	1K	5%	1/16W
R53	1-216-824-11	METAL CHIP	1.8K	5%	1/16W
R54	1-216-009-91	RES,CHIP	22	5%	1/10W
R55	1-216-841-11	METAL CHIP	47K	5%	1/16W
R57	1-216-057-00	METAL CHIP	2.2K	5%	1/10W
R58	1-216-827-11	METAL CHIP	3.3K	5%	1/16W
R59	1-216-831-11	METAL CHIP	6.8K	5%	1/16W
R61	1-216-864-11	METAL CHIP	0	5%	1/16W
R62	1-216-295-00	METAL CHIP	0	5%	1/10W
R63	1-216-017-91	RES,CHIP	47	5%	1/10W
R64	1-216-295-00	METAL CHIP	0	5%	1/10W
R65	1-216-829-11	METAL CHIP	4.7K	5%	1/16W
R66	1-216-049-91	METAL CHIP	1K	5%	1/10W
R67	1-216-841-11	METAL CHIP	47K	5%	1/16W
		< TERMINAL >			
TB1	1-537-489-21	TERMINAL BOARD (ANT) (FM EXT ANTENNA, MW/LW ANTENNA)			
		< TUNER UNIT >			
* TU1	1-693-378-11	TUNER UNIT			
		< VIBRATOR >			
X1	1-760-130-11	VIBRATOR, CRYSTAL (75kHz)			
**********					
		MISCELLANEOUS			
		**********			
2	1-533-217-31	HOLDER, FUSE			
64	1-410-397-21	FERRITE BEAD INDUCTOR			
114	1-783-958-11	WIRE, PARALLEL (FFC) (11 CORE)			

Ref. No.	Part No.	Description	Remark
115	1-783-957-11	WIRE, PARALLEL (FFC) (8 CORE)	
116	1-783-956-11	WIRE, PARALLEL (FFC) (9 CORE)	
117	1-783-960-11	WIRE, PARALLEL (FFC) (26 CORE)	
* 125	1-562-327-00	SOCKET, CONNECTOR 3P	
151	1-783-955-11	WIRE, PARALLEL (FFC) (16 CORE)	
159	1-452-732-11	MAGNET	
203	1-783-961-11	WIRE, PARALLEL (FFC) (19 CORE)	
211	1-660-966-11	OP RALAY FLEXIBLE BOARD	
212	1-777-517-11	WIRE, PARALLEL (15 CORE)	
214	1-783-962-11	WIRE, PARALLEL (FFC) (29 CORE)	
⚠267	8-583-028-02	OPTICAL PICK-UP KMS-260A	
⚠304	8-848-483-05	OPTICAL PICK-UP KSS-213C	
305	X-2626-202-1	MOTOR SHASSIS ASSY(MB) (INCLUDING M702)(SPINDLE)	
ANT1	1-754-023-11	ANTENNA, TELESCOPIC	
D901	8-719-302-38	DIODE RBV-602-01	
⚠F901	1-532-235-00	FUSE (T0.315AL/250V)	
⚠F902	1-532-299-00	FUSE (T5AL/250V)	
⚠F903	1-532-066-00	FUSE (T0.4AL/250V)	
⚠F904	1-532-388-51	FUSE (T2AL/250V)	
HR901	1-500-396-11	HEAD, OVER WRITE	
LCD1	1-803-283-11	LCD UNIT	
M701	X-2625-769-1	MOTOR GEAR ASSY (MB) (INCLUDING GEAR) (SLED)	
M703	1-763-224-11	MOTOR, DC (DOOR OPEN/CLOSE)	
M901	A-4672-135-A	MOTOR ASSY, SPINDLE (SPINDLE)	
M902	A-4672-133-A	MOTOR ASSY, SLED (SLED) (INCLUDING GEAR)	
M903	A-4672-134-A	MOTOR ASSY, LOADING (LOADING) (INCLUDING GEAR)	
SP301	1-505-829-11	SPEAKER (8cm) (L-CH)	
SP302	1-529-130-11	SPEAKER (8cm) (R-CH)	
⚠T901	1-433-781-11	TRANSFORMER, POWER	
**********			
		ACCESSORIES & PACKING MATERIALS	
		**********	
	1-501-374-11	ANTENNA, LOOP	
⚠	1-769-412-13	CORD, POWER	
⚠	1-770-019-11	ADAPTOR, CONVERSION PLUG 3P (UK)	
	3-704-222-11	LABEL, SERIAL NUMBER (PRINTER)	
	3-864-598-11	MANUAL, INSTRUCTION (ENGLISH, SPANISH)	
	3-864-598-21	MANUAL, INSTRUCTION (FRENCH,GERMAN) (AEP)	
	3-864-598-31	MANUAL, INSTRUCTION (DUTCH, PORTUGUESE) (AEP)	
	3-864-598-41	MANUAL, INSTRUCTION (SWEDISH, FINNISH) (AEP)	
	3-864-598-51	MANUAL, INSTRUCTION (ITALIAN) (AEP)	
	8-917-663-90	REMOTE COMMANDER RMT-CM50AD	
	4-991-047-01	LID, BATTERY CASE (FOR RMT-CM50AD)	
**********			
		**********	
		HARDWARE LIST	
		**********	
#1	7-627-552-27	SCREW,PRECISION +P 1.7X2	
#2	7-627-553-17	PRECISION SCREW +P 2X2 TYPE 3	
#3	7-627-852-28	+P 1.7X3	
#4	7-685-133-19	SCREW +P 2.6X6 TYPE2 SLIT	
#5	7-685-647-79	SCREW +BVTP 3X10 TYPE2 N-S	
#6	7-685-850-04	SCREW +BVTT 2X3 (S)	
#7	7-685-851-04	SCREW +BVTT 2X4 (S)	
#8	7-685-872-09	SCREW +BVTT 3X8 (S)	
#9	7-685-648-79	SCREW +BVTP 3X12 TYPE2 N-S	
#10	7-685-649-79	SCREW +BVTP 3X14 TYPE2 N-S	
#11	7-685-651-79	SCREW +BVTP 3X20 TYPE2 N-S	
#12	7-685-871-09	SCREW +BVTT 3X6 (S)	
#13	7-685-534-19	SCREW +BTP 2.6X8 TYPE2 N-S	
#14	7-685-535-19	SCREW +BTP 2.6X10 TYPE2 N-S	
#15	7-621-773-86	SCREW +B 2.6X4	
#16	7-621-772-00	SCREW +B 2X3	
#17	7-685-862-09	SCREW +BVTT 2.6X6 (S)	
#18	7-685-661-79	SCREW +BVTP 4X12 TYPE2 N-S	
#19	7-623-508-01	LUG, 3	
#20	7-685-646-79	SCREW +BVTP 3X8 TYPE2 N-S	

The components identified by mark ⚠ or dotted line with mark ⚠ are critical for safety.
Replace only with part number specified.

9-924-996-11

Sony Corporation
Personal Audio Company

99D0251-1
Printed in Japan © 1999.4
Published by General Engineering Dept.

ZS-M50

SERVICE MANUAL

Ver 1.1 1999.07

AEP Model
UK Model
Tourist Model

Dolby noise reduction manufactured under license from Dolby Laboratories Licensing Corporation.
"DOLBY" and the double-D symbol □□ are trademarks of Dolby Laboratories Licensing Corporation.

MD Section	Model Name Using Similar Mechanism	NEW
	MD Mechanism Type	MDM-3Z
	Optical Pick-up Type	KMS-260A
CD Section	Model Name Using Similar Mechanism	CFD-S27
	CD Mechanism Type	KSM-213CDM
	Optical Pick-up Type	KSS-213C

SPECIFICATIONS

CD player section

System
Compact disc digital audio system
Laser diode properties
Material: GaAlAs
Wave length: 785 nm
Emission duration: Continuous
Laser output: Less than 44.6 µW
(This output is the value measured at a distance of about 200 mm from the objective lens surface on the optical pick-up block with 7 mm aperture.)
Spindle speed
200 r/min (rpm) to 500 r/min (rpm) (CLV)
Number of programme positions
2
Frequency response
20 - 20,000 Hz +1/–2 dB
Wow and flutter
Below measurable limit

Radio section

Frequency range
FM: 87.5 - 108 MHz
MW: 531 - 1,602 kHz
LW: 153 - 279 kHz
IF FM: 10.7 MHz
MW/LW: 450 kHz
Aerials
FM: Telescopic aerial
External aerial terminal
MW/LW: External aerial terminals

MD player section

System
Minidisc digital audio system
Disc
MiniDisc
Laser diode properties
Material: GaAlAs
Wave length: 785 nm
Emission duration: Continuous
Laser output: Less than 44.6 µW
(This output is the value measured at a distance of about 200 mm from the objective lens surface on the optical pick-up block with 7 mm aperture.)
Recording/playback time
Maximum 74 minutes (with MDW-74)
Revolutions
400 rpm to 900 rpm (CLV)
Error correction
Advanced Cross Interleave Reed Solomon Code (ACIRC)
Sampling frequency
44.1 kHz
Coding
Adaptive TRansform Acoustic Coding (ATRAC)
Modulation system
EFM (Eight-to-Fourteen Modulation)
Number of programme positions
2 stereo programme positions

– Continued on page 2 –

PERSONAL MINIDISC SYSTEM

MICROFILM

SONY®

Frequency response
20 - 20,000 Hz +1/–2 dB
Signal-to-noise ratio
Over 80 dB (during playback)
Wow and flutter
Below measurable limit

General

Speaker
Full-range : 8 cm (3 in.) dia., 4 ohms cone type (2)
Inputs
LINE IN (stereo minijack): Sensitivity 436 mV/ 870 mV
Outputs
Headphones jack (stereo minijack) (1):
For 32 ohms impedance headphones
Maximum power output
7 W + 7 W
Power requirements
For personal minidisc system:
230 V AC, 50 Hz
For back-up memory:
4.5 V DC, 3 R6 (size AA) batteries
For remote controller:
3 V DC, 2 R6 (size AA) batteries
Power consumption
32 W

Dimensions (incl.projecting parts)
approx. 450 x 164 x 239.4 mm (w/h/d)
(17 ¾ x 6 ½ x 9 ½ inches)
Mass
approx. 6 kg (13 lb. 4 oz)
Supplied accessories
Mains lead (1)
Remote controller (1)
MW/LW loop aerial (1)

Design and specifications are subject to change without notice.

TABLE OF CONTENTS

Specifications 1

1. SERVICE NOTE 3

2. GENERAL 5

3. DISASSEMBLY
3-1. Cabinet (Front) Sub ASSY, Cabinet (Rear) Sub ASSY 7
3-2. Control (L) Board 8
3-3. Control (R) Board 8
3-4. Control (F) Board, JOG Board 8
3-5. BATT Board 9
3-6. Power Board 9
3-7. Tuner Board, Antenna SW Board 9
3-8. Center Block Section 10
3-9. Cabinet (Upper), Chassis (Main) 10
3-10. Optical Pick-up ASSY, CD Motor Board 11
3-11. Control SW Board 11
3-12. Motor Board, Belt, Motor (M703) 11
3-13. LCD Board, BL Board 12
3-14. Audio Board 12
3-15. Line Board 13
3-16. Main Board 13
3-17. MD Block ASSY 14
3-18. DG Board 14
3-19. Chassis (MD) 15
3-20. BD Board 15
3-21. Sub Chassis ASSY, MD Mechanism Deck 16
3-22. Shutter ASSY 16
3-23. SW Board 17
3-24. "Head, Over Write", Slider ASSY 17
3-25. MD Optical Pick-up Block 18

4. TEST MODE
4-1. Caution When Using the Test Mode 19
4-2. Test Mode Settings 19
4-3. Releasing the Test Mode 19
4-4. Basic Operations of the Test Mode 19
4-5. Selecting the Test Mode 19
4-6. Functions of Other Buttons 20
4-7. Test Mode Display 20

5. ADJUSTMENTS
MD Section 21
CD Section 24
Display Section 25
Tuner Section 26

6. DIAGRAMS
6-1. Explanation of IC Terminals 28
6-2. Block Diagram (Main Section) 35
6-3. Block Diagram (MD Section) 39
6-4. Printed Wiring Boards –Main Section – 43
6-5. Schematic Diagram –Main Section (1/3) – 47
6-6. Schematic Diagram –Main Section (2/3) – 51
6-7. Schematic Diagram –Main Section (3/3) – 55
6-8. Printed Wiring Boards –Audio Section – 58
6-9. Schematic Diagram –Audio Section – 61
6-10. Schematic Diagram –DG Section – 66
6-11. Printed Wiring Boards –DG Section – 71
6-12. Printed Wiring Boards –Tuner Section – 73
6-13. Schematic Diagram –Tuner Section – 75
6-14. Schematic Diagram –Control Section – 78
6-15. Printed Wiring Boards –Control Section – 81
6-16. Printed Wiring Boards –BD Section – 83
6-17. Schematic Diagram –BD Section – 85

7. EXPLODED VIEWS
7-1. Rear Cabinet Section 95
7-2. Front Cabinet Section 96
7-3. Center Block Section 97
7-4. Upper Cabinet Section 98
7-5. MD Section (1) 99
7-6. MD Section (2) 100
7-7. CD Optical Pick-up Section 101

8. ELECTRICAL PARTS LIST 102

SECTION 1
SERVICE NOTE

Flexible Circuit Board Repairing

- Keep the temperature of the soldering iron around 270°C during repairing.
- Do not touch the soldering iron on the same conductor of the circuit board (within 3 times).
- Be careful not to apply force on the conductor when soldering or unsoldering.

Notes on chip component replacement

- Never reuse a disconnected chip component.
- Notice that the minus side of a tantalum capacitor may be damaged by heat.

SAFETY-RELATED COMPONENT WARNING!!

COMPONENTS IDENTIFIED BY MARK ⚠ OR DOTTED LINE WITH MARK ⚠ ON THE SCHEMATIC DIAGRAMS AND IN THE PARTS LIST ARE CRITICAL TO SAFE OPERATION.
REPLACE THESE COMPONENTS WITH SONY PARTS WHOSE PART NUMBERS APPEAR AS SHOWN IN THIS MANUAL OR IN SUPPLEMENTS PUBLISHED BY SONY.

NOTES ON HANDLING THE OPTICAL PICK-UP BLOCK OR BASE UNIT

The laser diode in the optical pick-up block may suffer electrostatic breakdown because of the potential difference generated by the charged electrostatic load, etc. on clothing and the human body.
During repair, pay attention to electrostatic breakdown and also use the procedure in the printed matter which is included in the repair parts.
The flexible board is easily damaged and should be handled with care.

NOTES ON LASER DIODE EMISSION CHECK

The laser beam on this model is concentrated so as to be focused on the disc reflective surface by the objective lens in the optical pick-up block. Therefore, when checking the laser diode emission, observe more than 30 cm away from the objective lens.

LASER DIODE AND FOCUS SEARCH OPERATION CHECK

1. Close the lid for CD.
2. Press CD ▷II button.
3. Confirm the laser diode emission while observing the objecting lens. When there is no emission, Auto Power Control circuit or Optical Pick-up is broken.
   Objective lens moves up and down once for the focus search.

CAUTION DURING WHEN MOUNTING THE PULLEY FOR THE CD DOOR MOTOR (M703)

Make the following adjustment when mounting the CD door motor (part number : 1-763-224-11) and motor pulley (part number : 2-627-174-01) of the CD section.

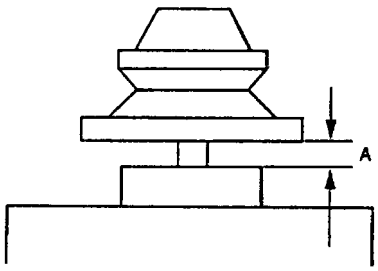

Specification : A = 0.9 to 1.1mm

CHUCK PLATE JIG ON REPAIRING

On repairing CD section, playing a disc without the CD lid, use Chuck Plate Jig.
• Code number of Chuck Plate Jig : X-4918-255-1

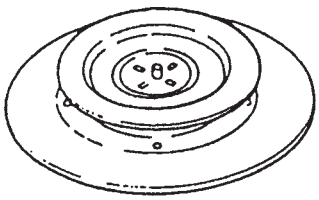

ABOUT THE BD BOARD WAVEFORM CHECKING JIG

The special jig (J-2501-124-A) is highly convenient when checking the waveform of the BD board of the MD section. Pin names and items to check are as follows:

I+3V : for IOP measurement (check for depleted optical pickup laser)
IOP : for IOP measurement (check for depleted optical pickup laser)
TEO : TRK error signal (traverse adjustment)
VC : Standard level for checking signals
RF : RF signal (jitter check)

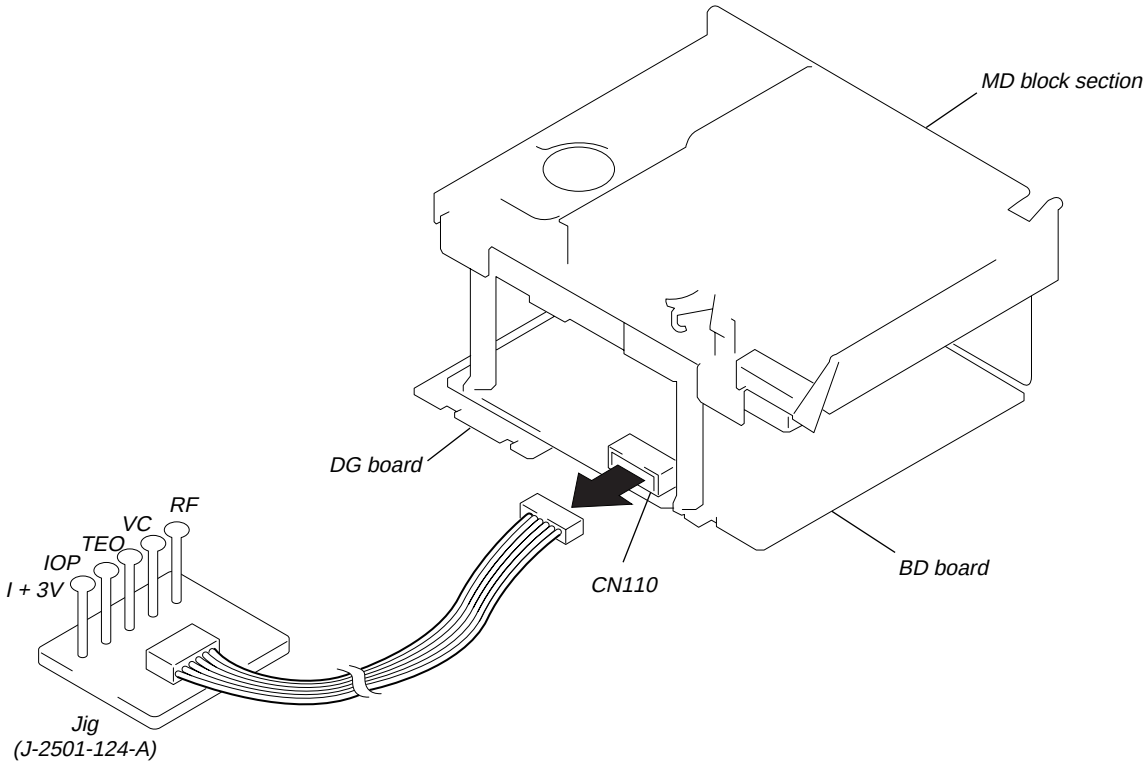

ABOUT THE HARDWARE RESET

It is possible to reset the system microcomputer by pressing the RESET button located on the bottom with a pointed object. Use this button when the unit cannot be operated properly due to such problems as microcomputer errors, etc.

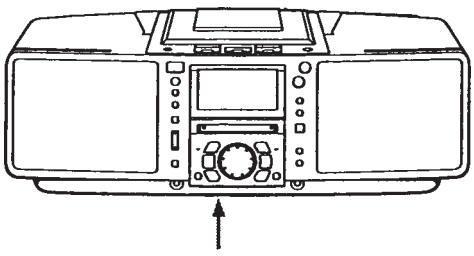

SECTION 2
GENERAL

LOCATION AND FUNCTION OF CONTROLS

FRONT PANEL: MD/CD/RADIO Section

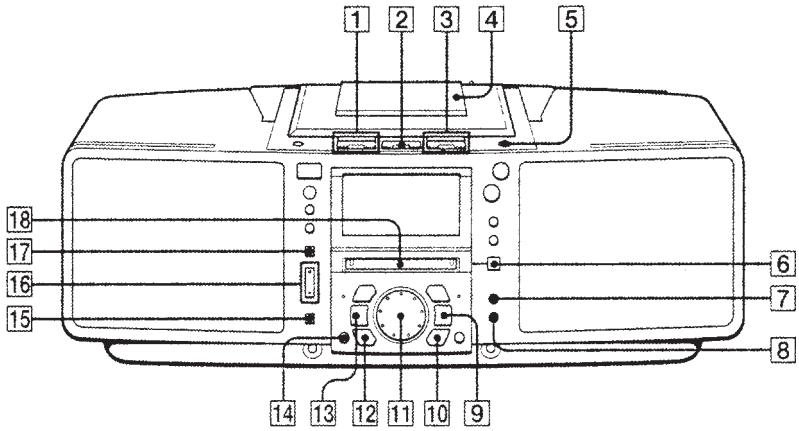

1 MD operation buttons
▷II (play/pause)
□ (stop)
2 BAND button
3 CD operation buttons
▷II (play/pause)
□ (stop)
4 CD lid
5 ⏏ CD OPEN/CLOSE button
6 ⏏ MD EJECT button
7 MONO/ST, REPEAT button
8 AUTO PRESET/RDS/SHUF/PGM button
9 TUNE +, ⇨, ▶▶ button
10 YES, ENTER button
11 Jog dial
I◀◀/▶▶I AMS
PRESET
12 NO, CANCEL button
13 TUNE –, ⇦, ◀◀ button
14 EDIT button
15 REC button
16 REC IT button
TO TOP, TO END
17 SYNCHRO REC
CD ▶ MD button
18 MD insert section

FRONT PANEL: TIMER, COM Section

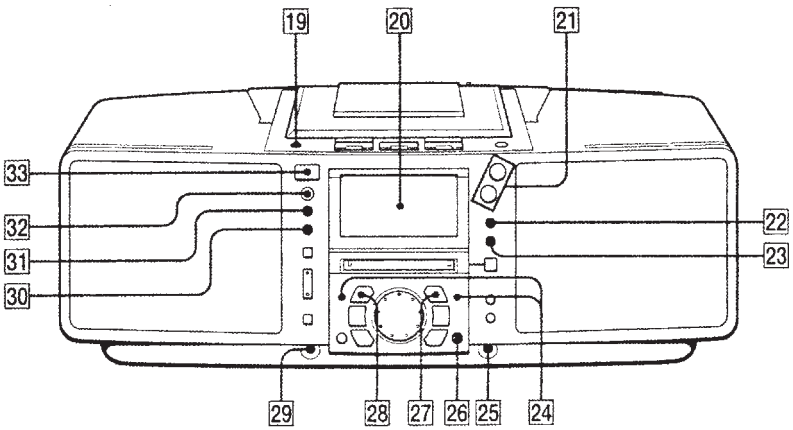

19 LINE/LINE LEVEL button
20 Display window
21 VOLUME +, – buttons
22 BASS/TREBLE button
23 MEGA BASS button
24 Jog dial Function indicator
AMS/PRESET SELECT
25 LINE IN terminal
26 DISPLAY button
27 INSERT/TIMER button
28 DELETE/CLOCK button
29 ∩ (Headphones) Jack (stereo mini jack)
30 STANDBY button
31 SLEEP button
32 Remote control receiver section
33 OPERATE button

REAR PANEL Section

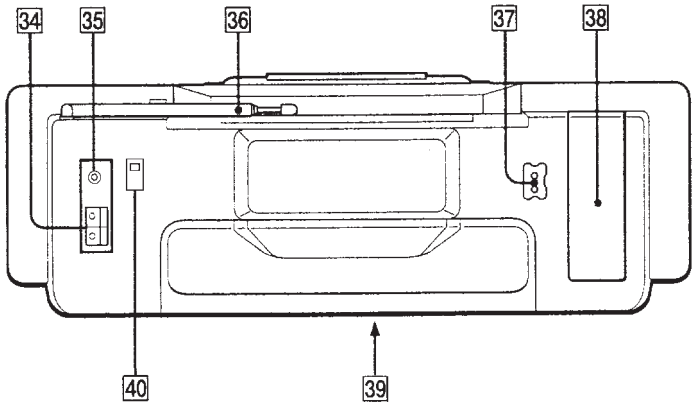

34 MW/LW ANTENNA terminal
35 FM EXT ANTENNA terminal
36 FM rod antenna
37 ~ AC IN jack
38 Battery compartment (for memory back-up)
39 RESET button (bottom)
40 FM ANTENNA SELECTOR switch

REMOTE CONTROL Section

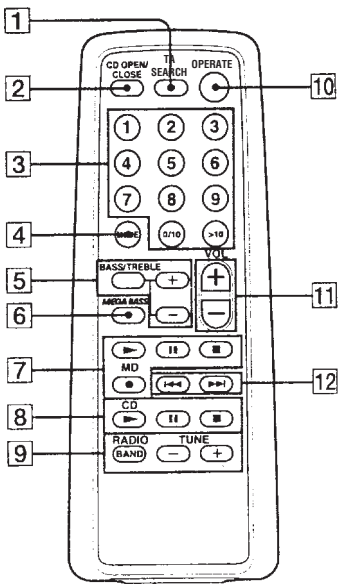

1 TA SERCH button
2 CD OPEN/CLOSE button
3 Numeric buttons
4 MODE button
5 BASS/TREBLE +, – buttons
6 MEGA BASS button
7 MD operation buttons
▶ (play)
❚❚ (pause)
■ (stop)
● (rec)
8 CD operation buttons
▶ (play)
❚❚ (pause)
■ (stop)
9 RADIO operation buttons
BAND
TUNE –, +
10 OPERATE button
11 VOL +, – buttons
12 ⏮, ⏭ AMS, select, search buttons

SECTION 3
DISASSEMBLY

● The equipment can be removed using the following procedure.

< MAIN BLOCK SECTION >

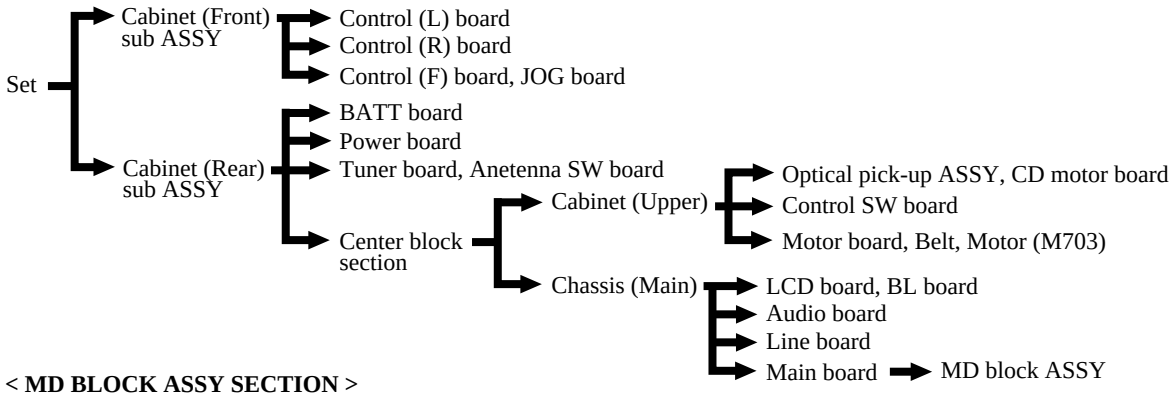

< MD BLOCK ASSY SECTION >

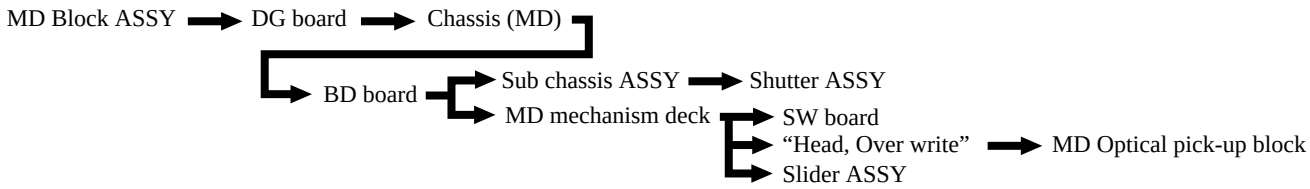

Note : Follow the disassembly procedure in the numerical order given.

<MAIN BLOCK SECTION>

3-1. CABINET (FRONT) SUB ASSY, CABINET (REAR) SUB ASSY

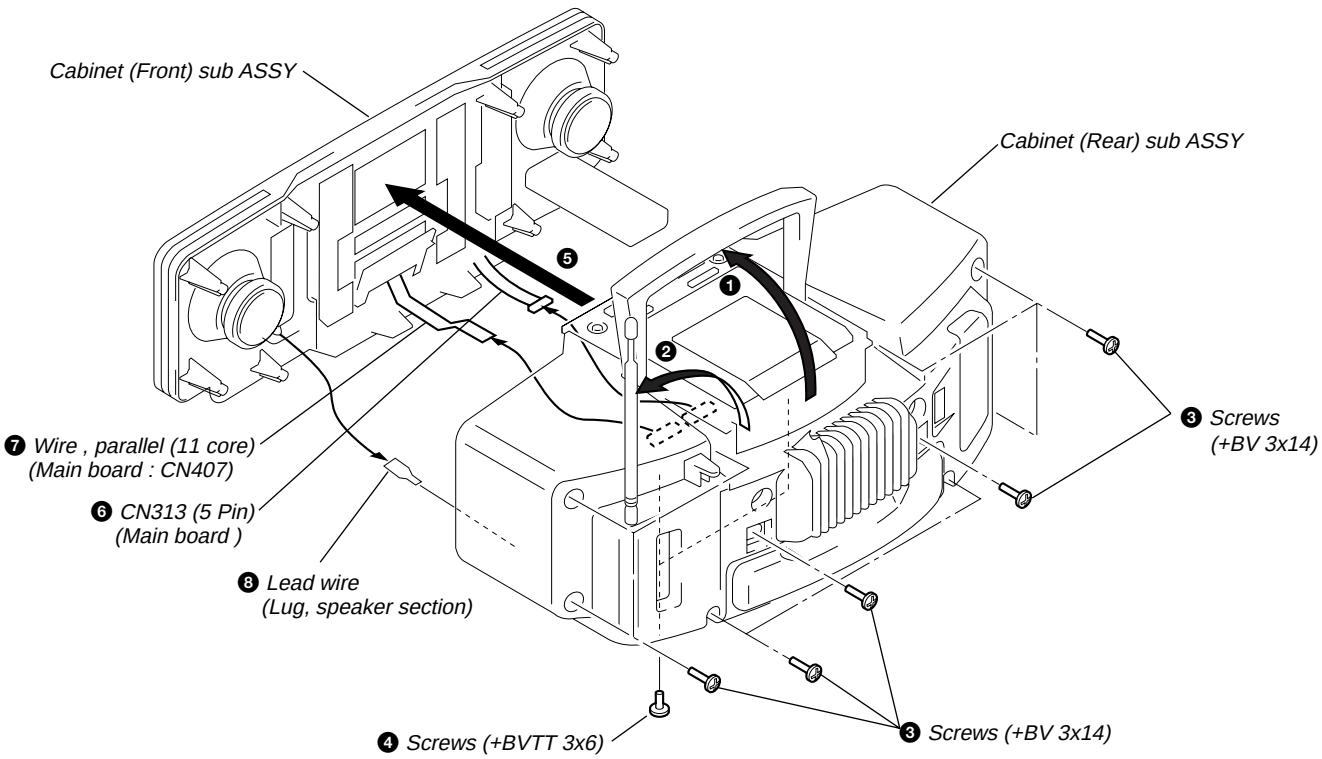
Cabinet (Front) sub ASSY
Cabinet (Rear) sub ASSY
❺
❶
❷
❸ Screws (+BV 3x14)
❼ Wire , parallel (11 core) (Main board : CN407)
❻ CN313 (5 Pin) (Main board)
❽ Lead wire (Lug, speaker section)
❹ Screws (+BVTT 3x6)
❸ Screws (+BV 3x14)

3-2. CONTROL (L) BOARD

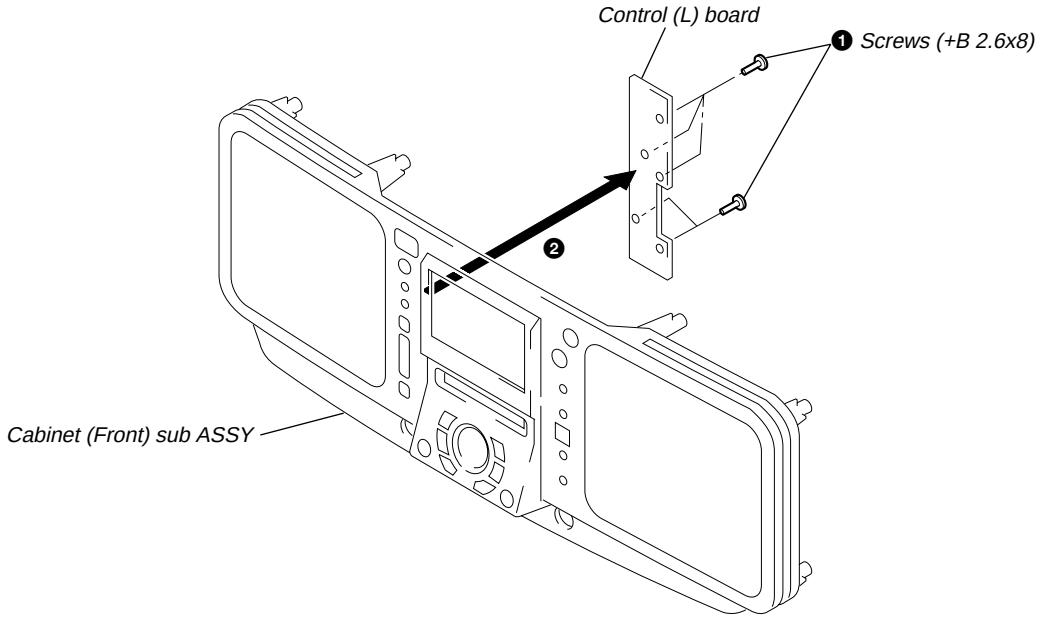

3-3. CONTROL (R) BOARD

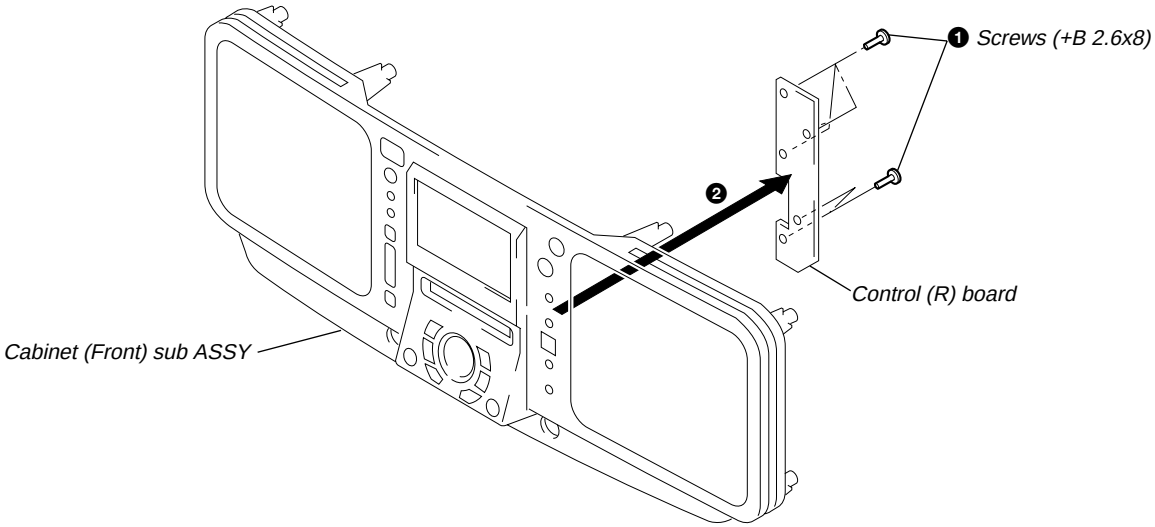

3-4. CONTROL (F) BOARD, JOG BOARD

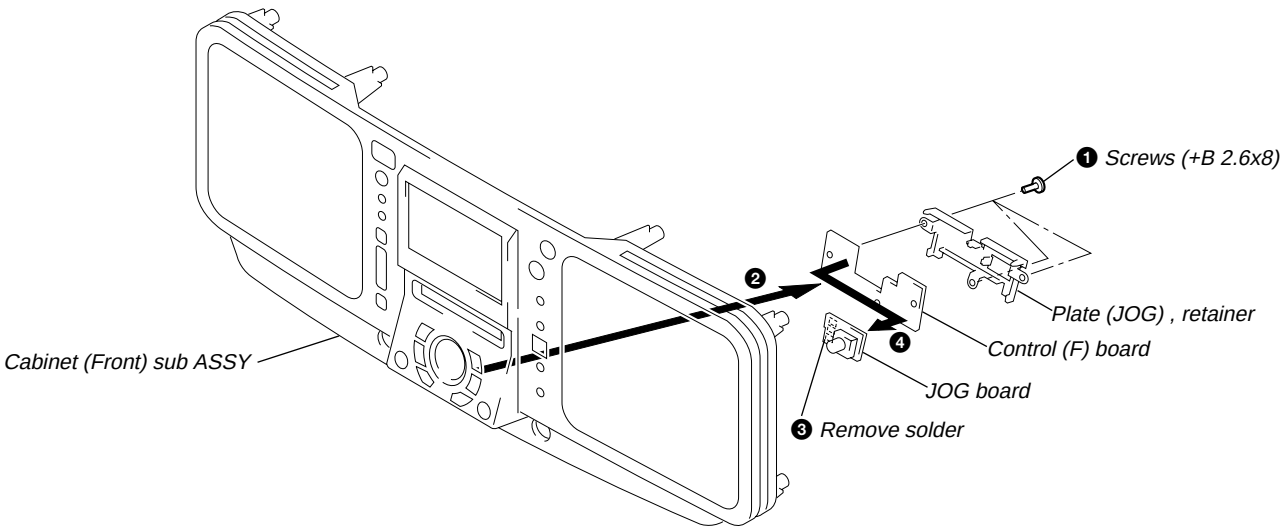

3-5. BATT BOARD

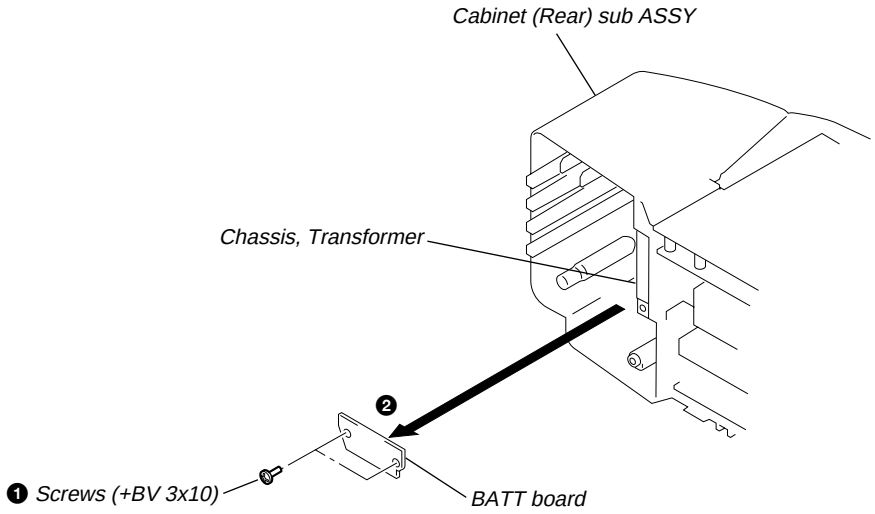

3-6. POWER BOARD

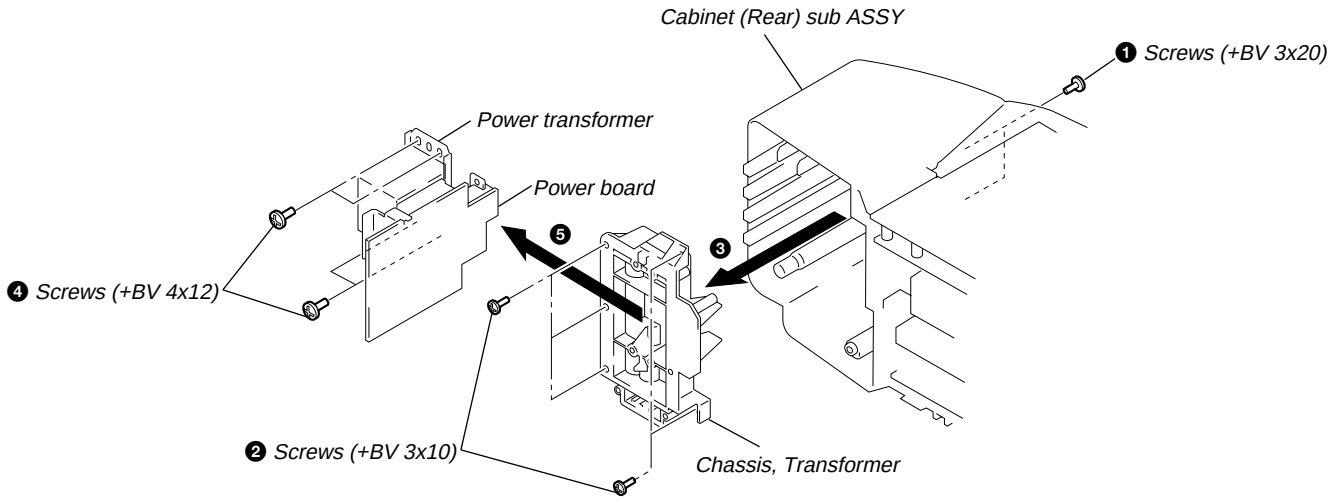

3-7. TUNER BOARD, ANTENNA SW BOARD

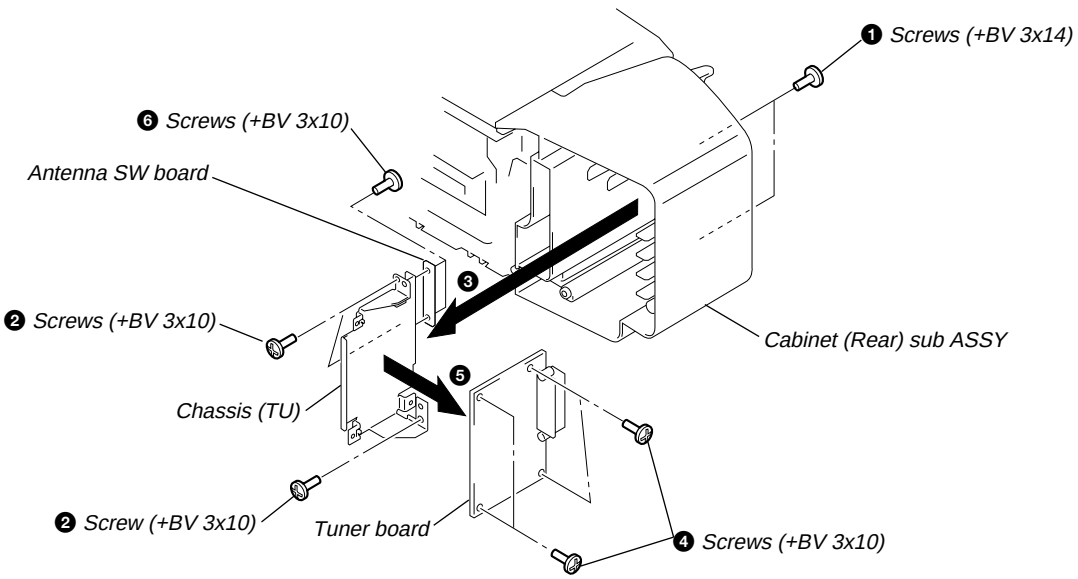

3-8. CENTER BLOCK SECTION

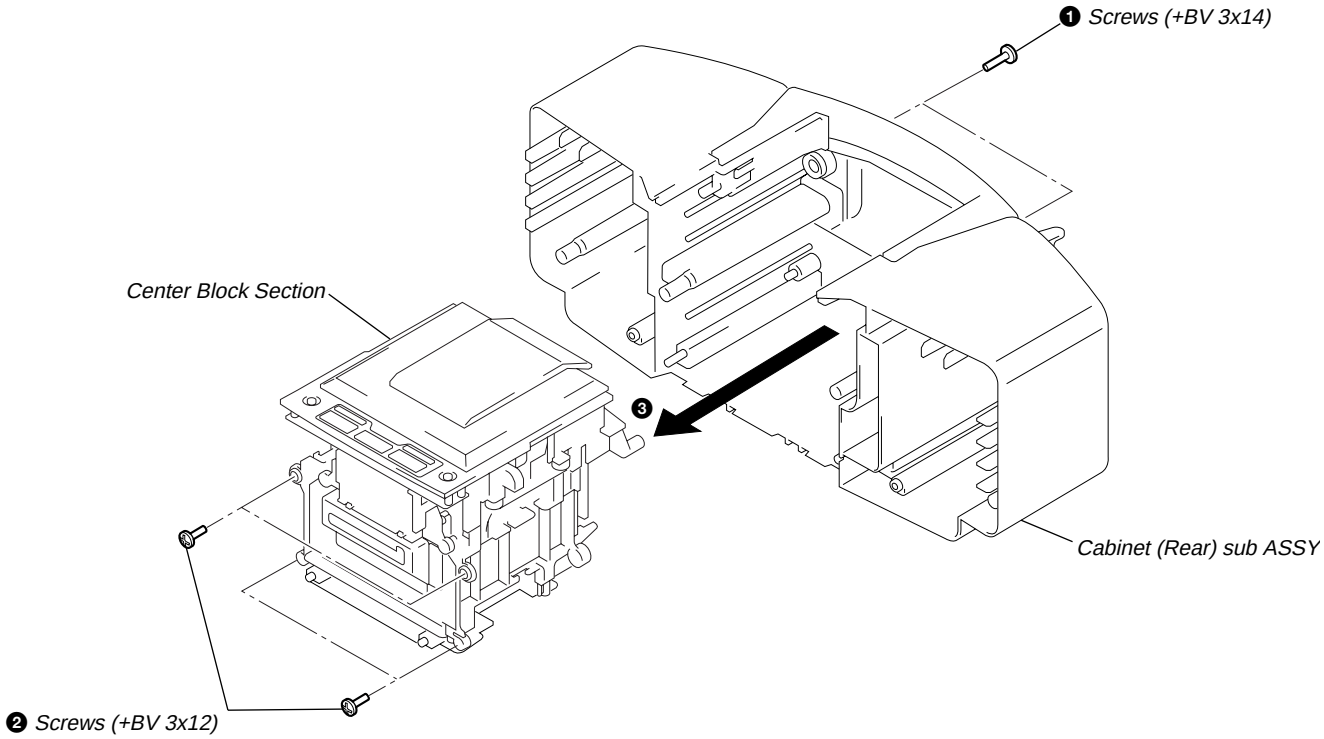

3-9. CABINET (UPPER), CHASSIS (MAIN)

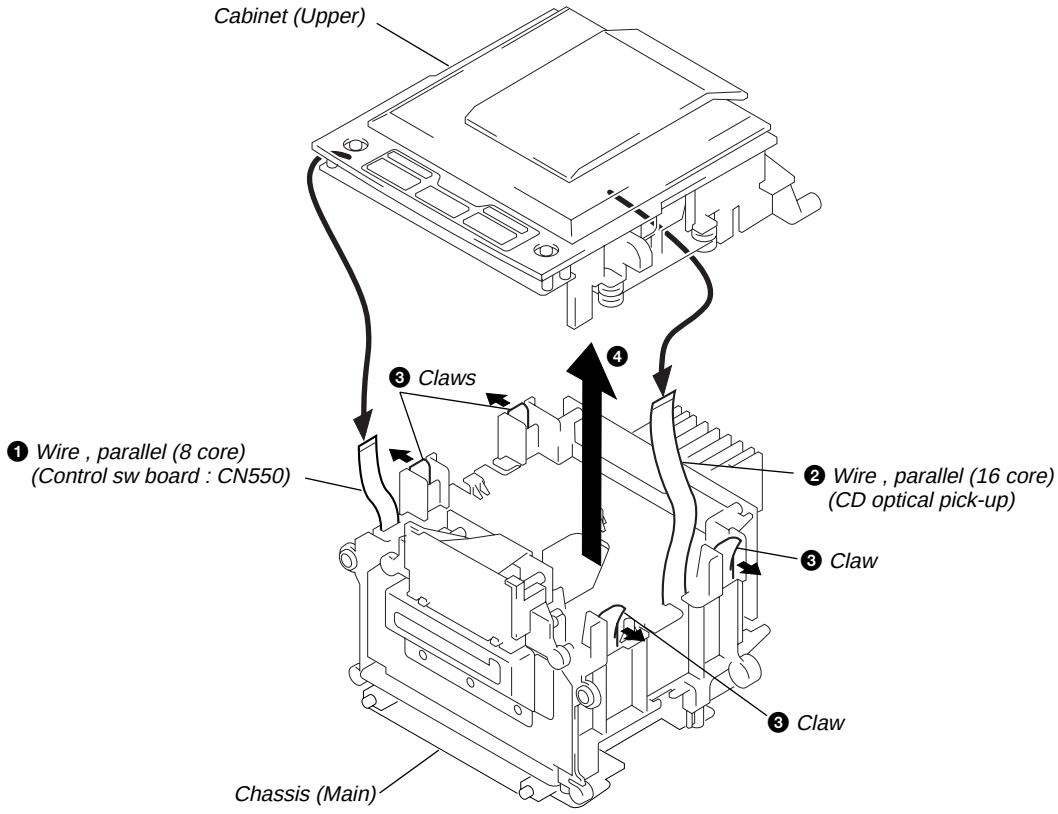

3-10. OPTICAL PICK-UP ASSY, CD MOTOR BOARD

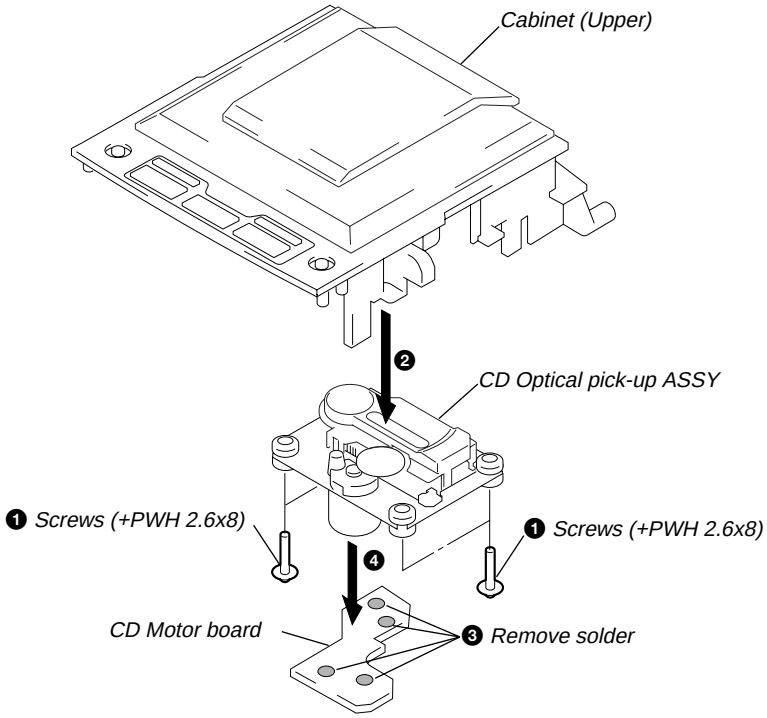

3-11. CONTROL SW BOARD

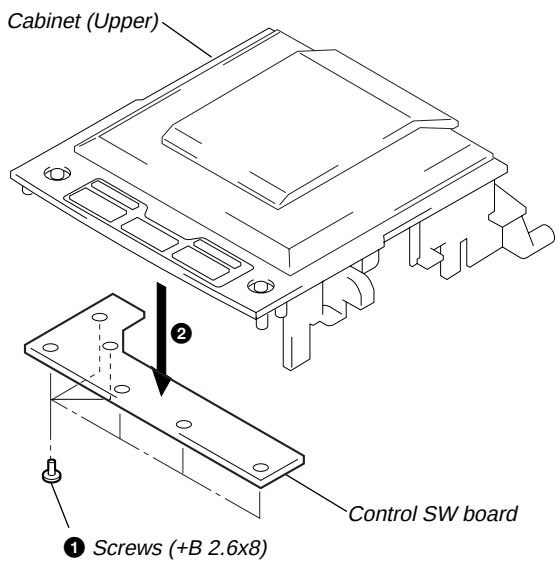

3-12. MOTOR BOARD, BELT, MOTOR (M703)

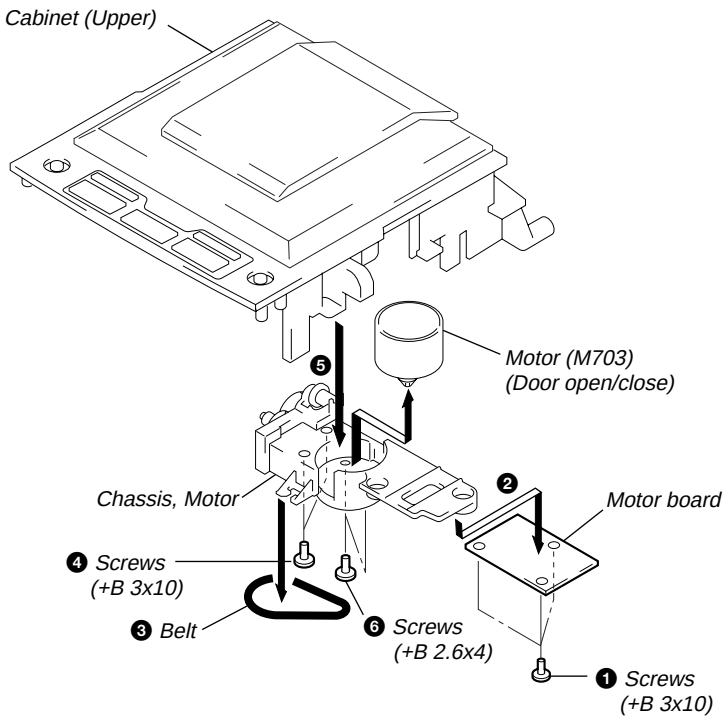

3-13. LCD BOARD, BL BOARD

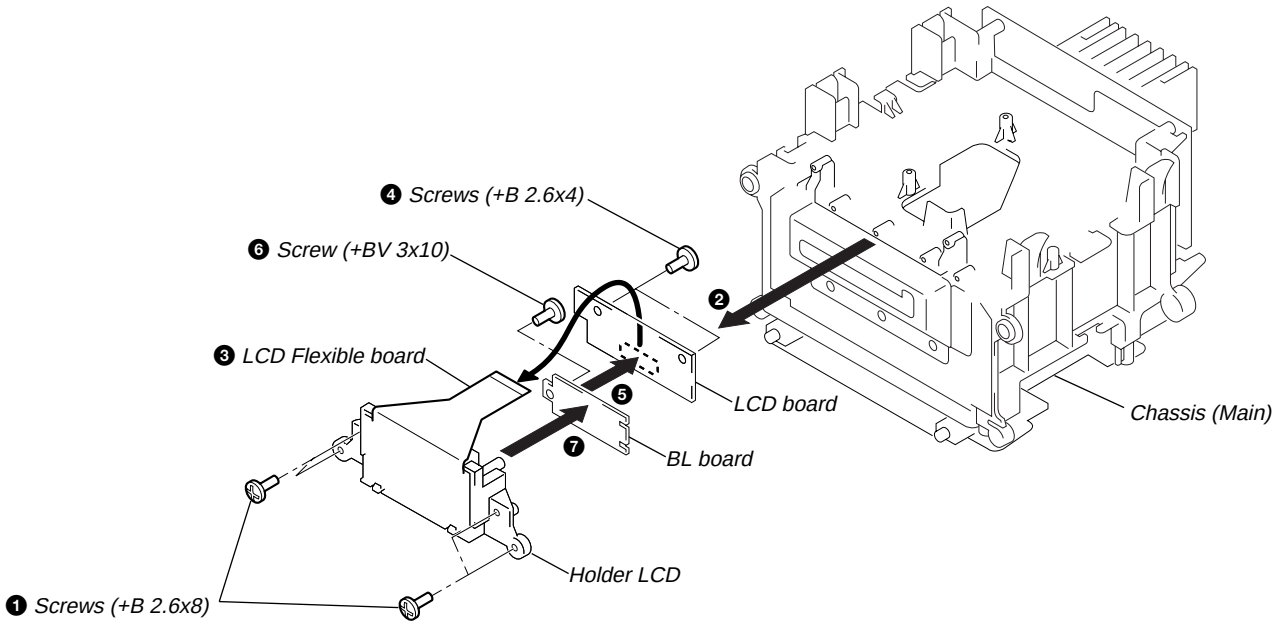

3-14. AUDIO BOARD

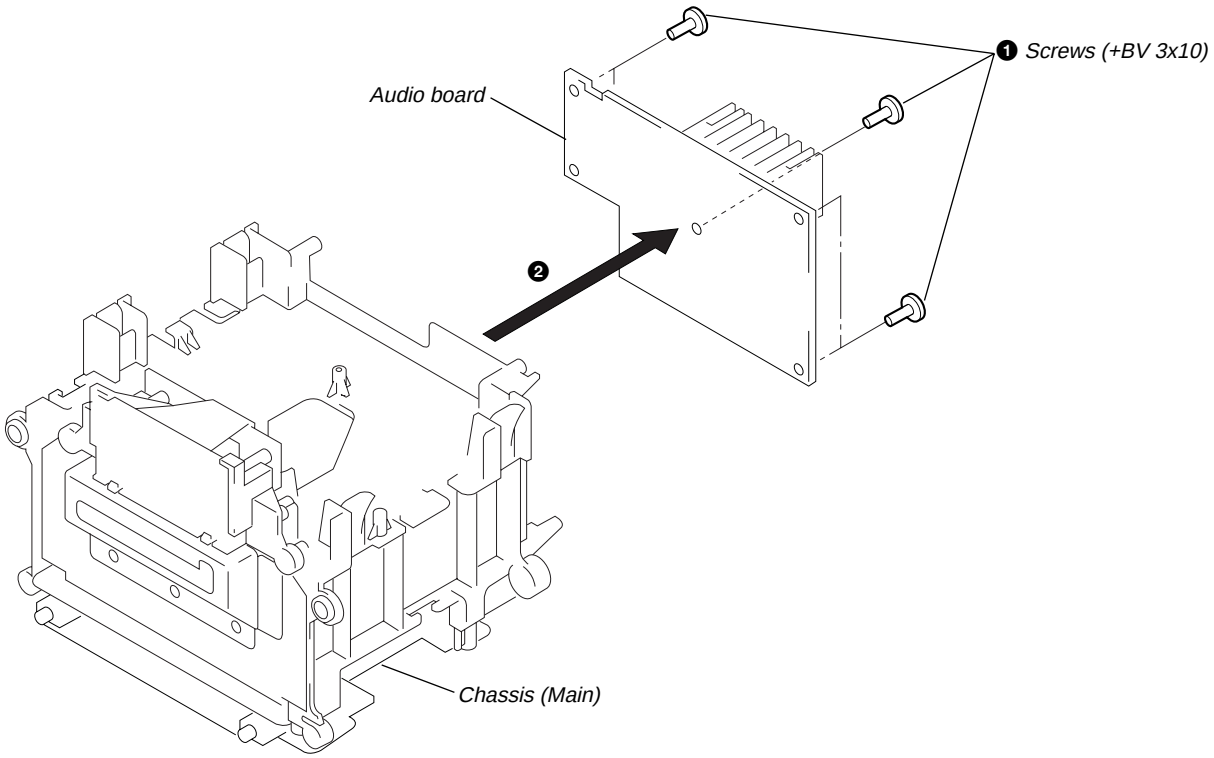

3-15. LINE BOARD

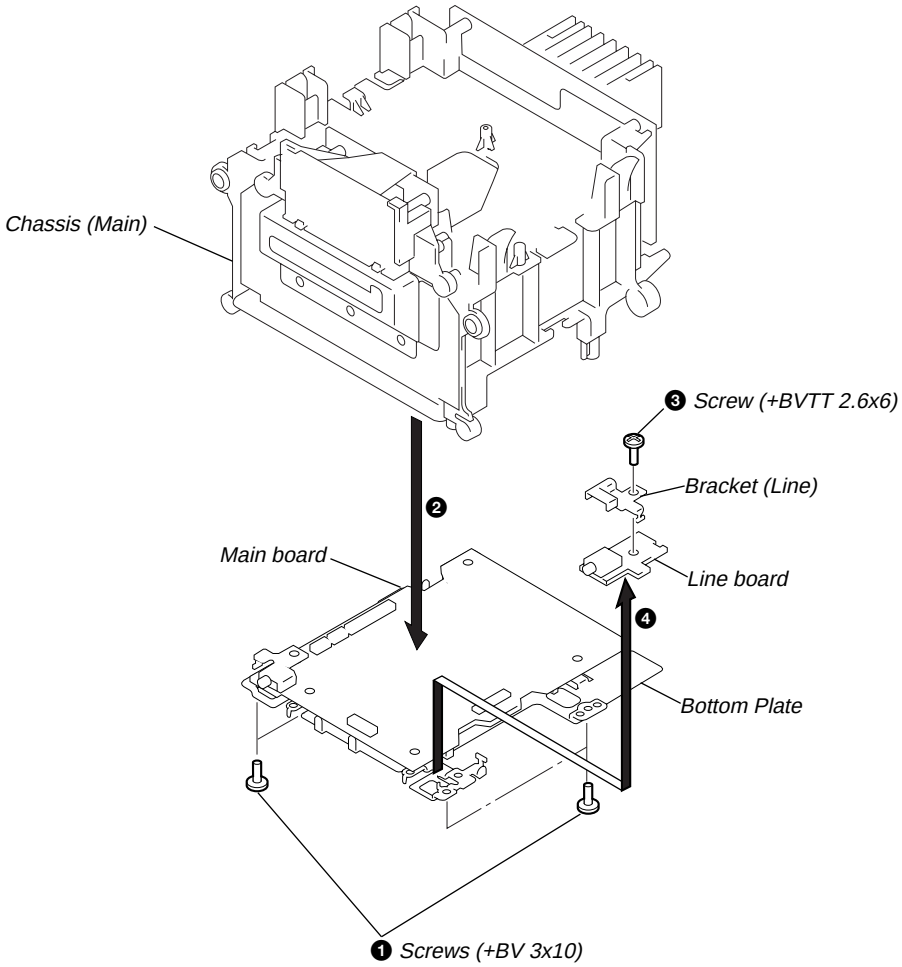

3-16. MAIN BOARD

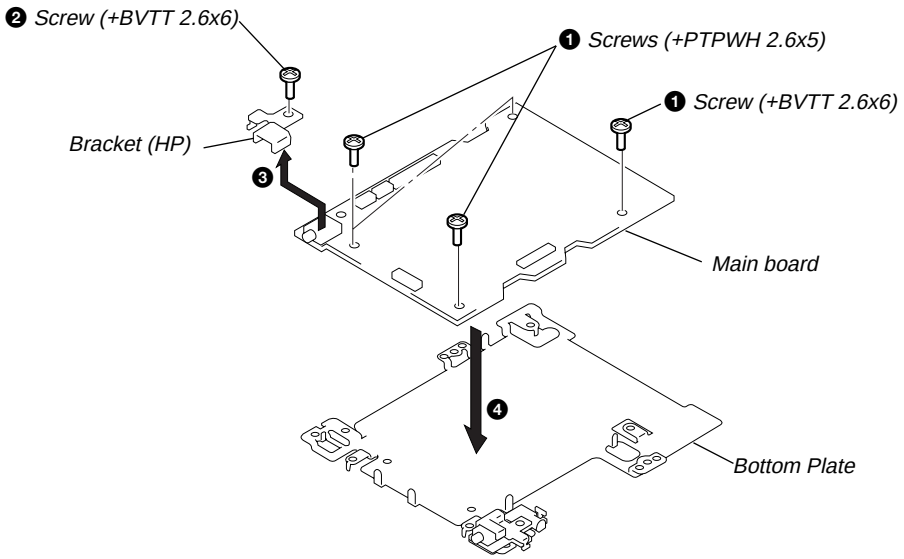

3-17. MD BLOCK ASSY

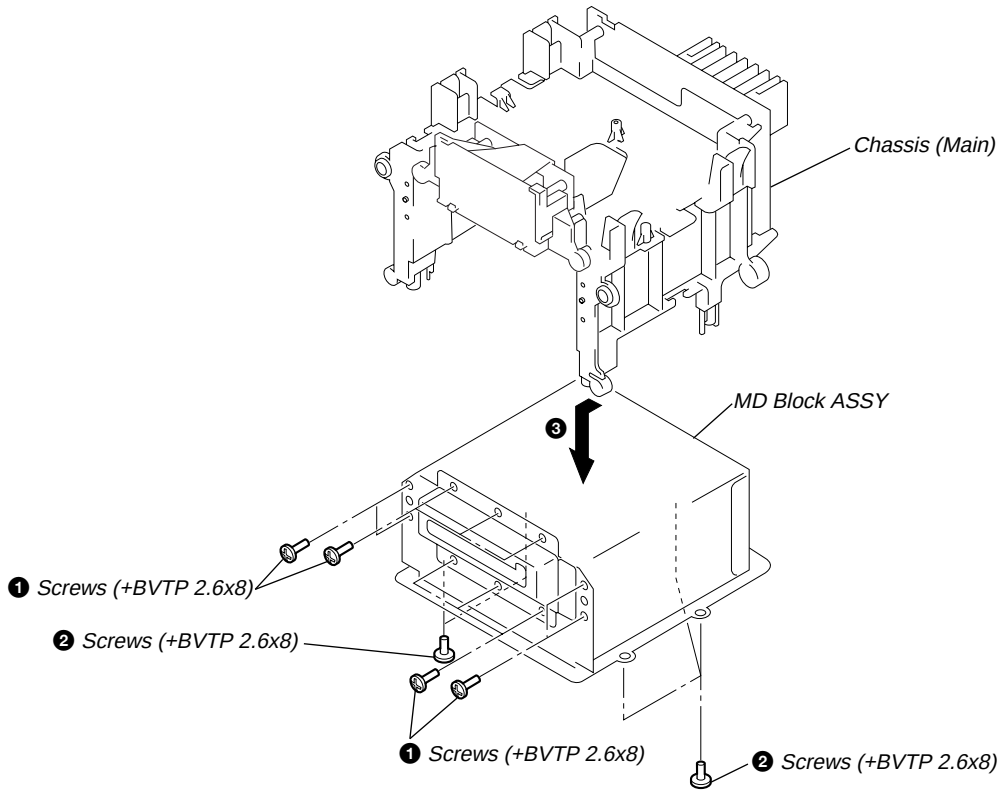

<MD BLOCK ASSY SECTION>

3-18. DG BOARD

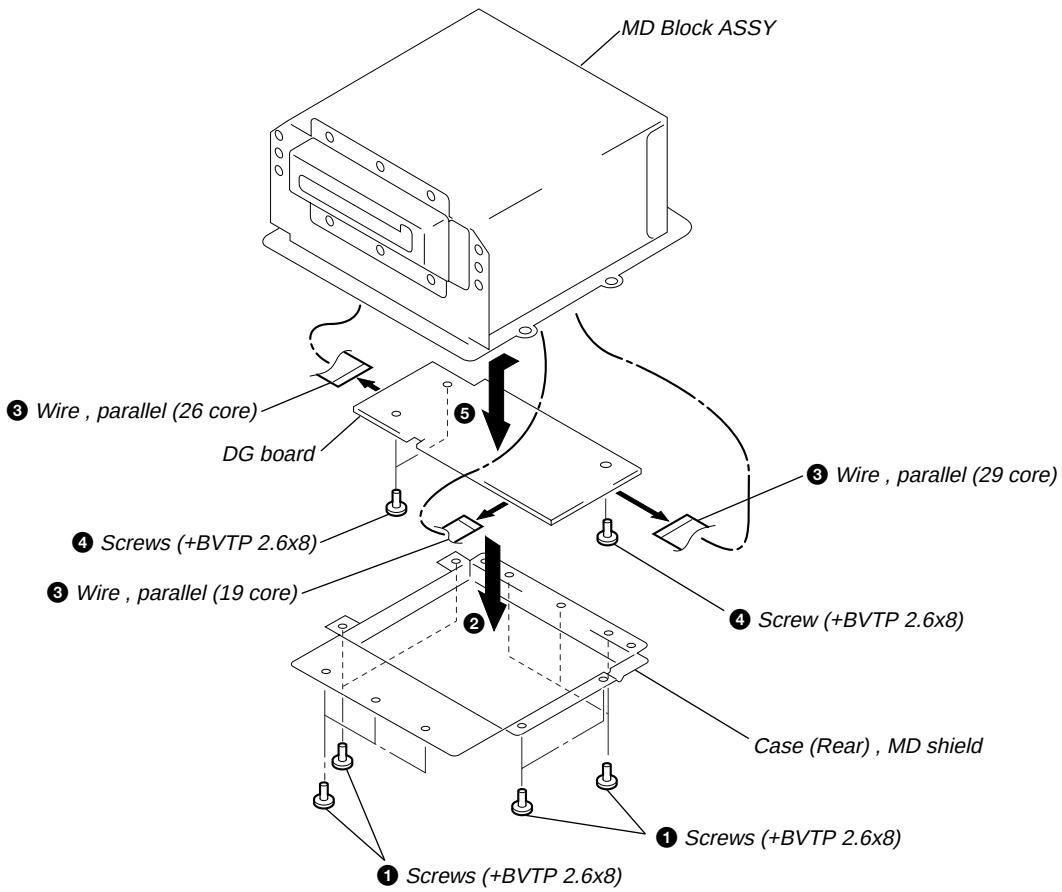

3-19. CHASSIS (MD)

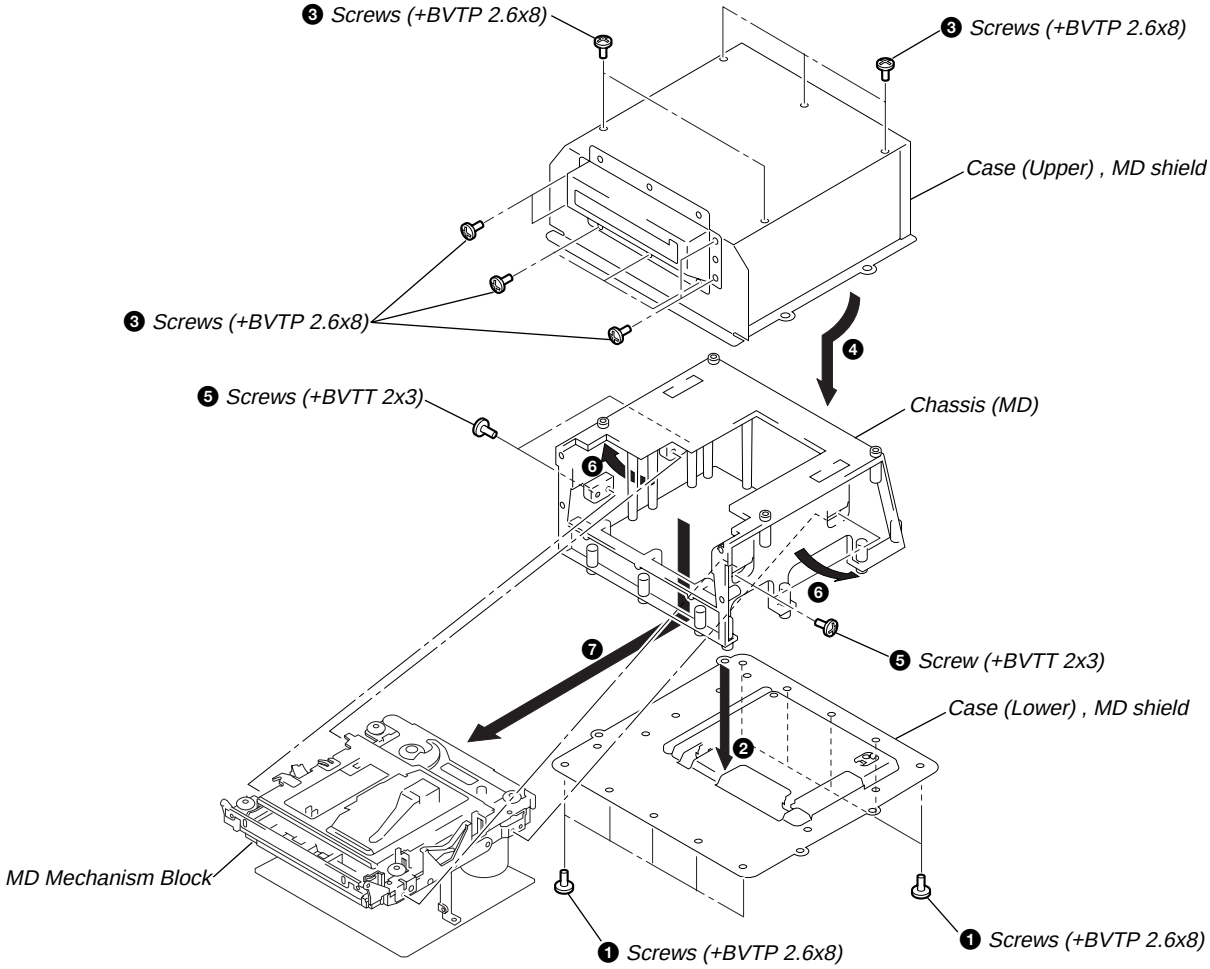

3-20. BD BOARD

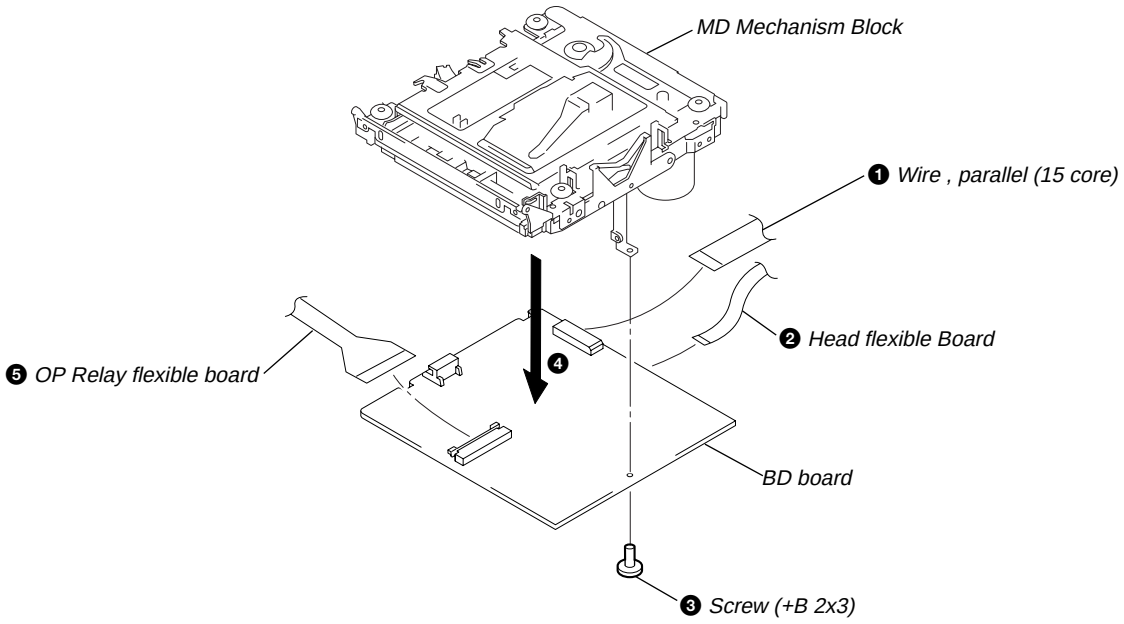

3-21. SUB CHASSIS ASSY, MD MECHANISM DECK

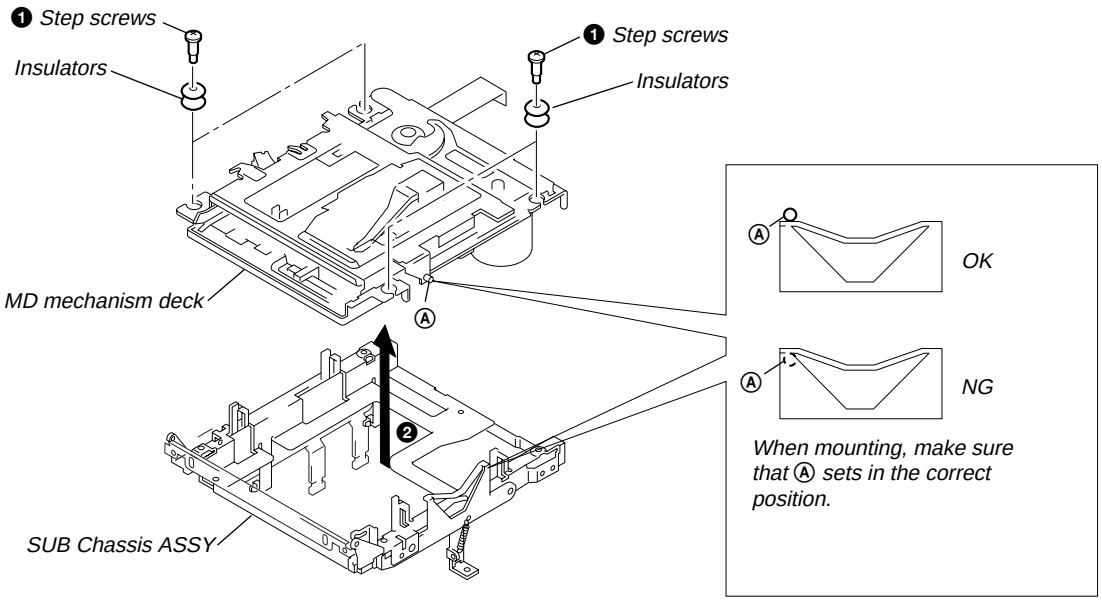

3-22. SHUTTER ASSY

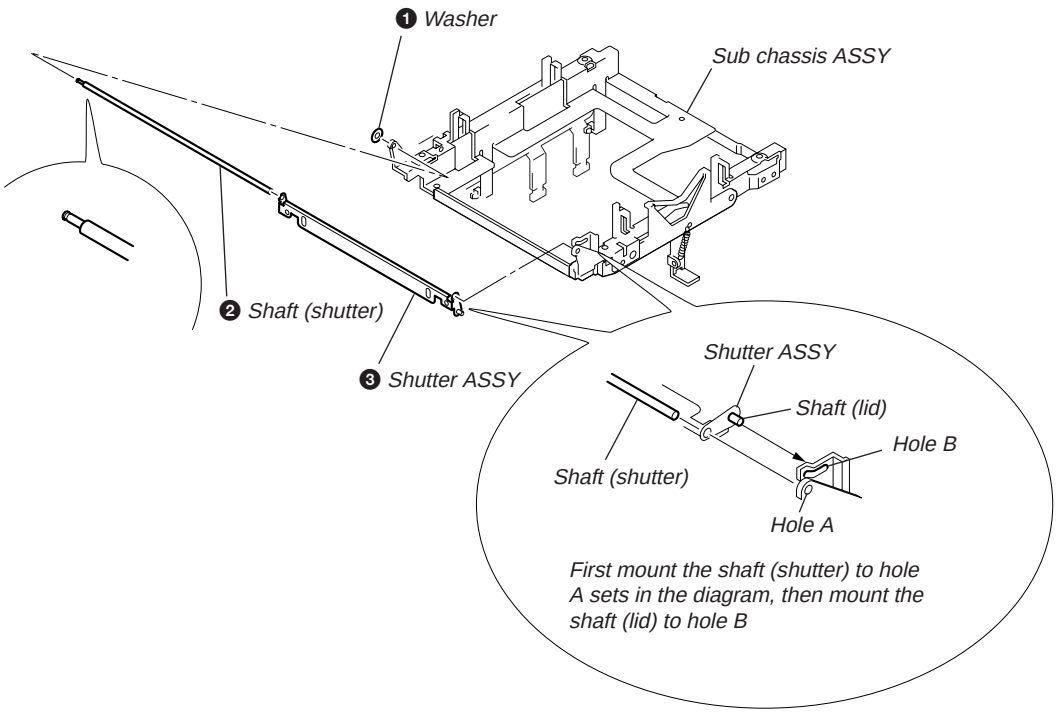
❶ Washer
Sub chassis ASSY
❷ Shaft (shutter)
❸ Shutter ASSY
Shutter ASSY
Shaft (lid)
Hole B
Shaft (shutter)
Hole A
First mount the shaft (shutter) to hole A sets in the diagram, then mount the shaft (lid) to hole B

3-23. SW BOARD

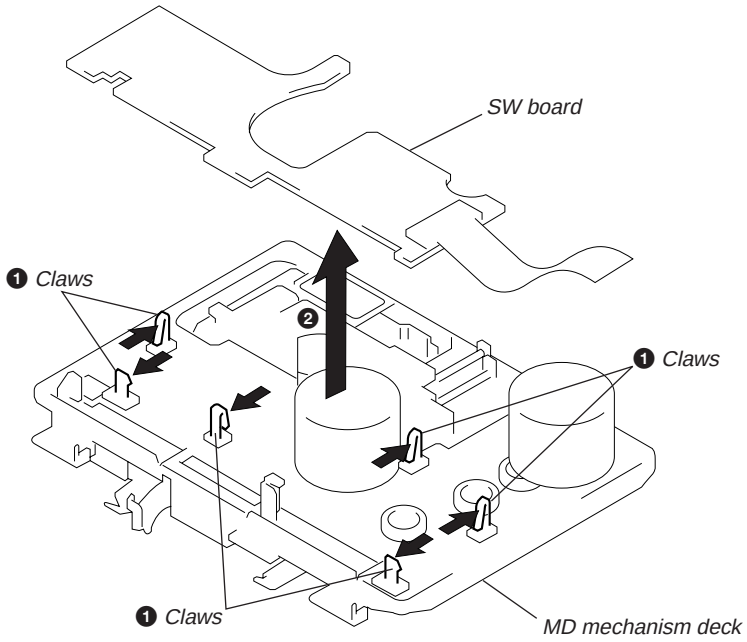

3-24. " HEAD, OVER WRITE ", SLIDER ASSY

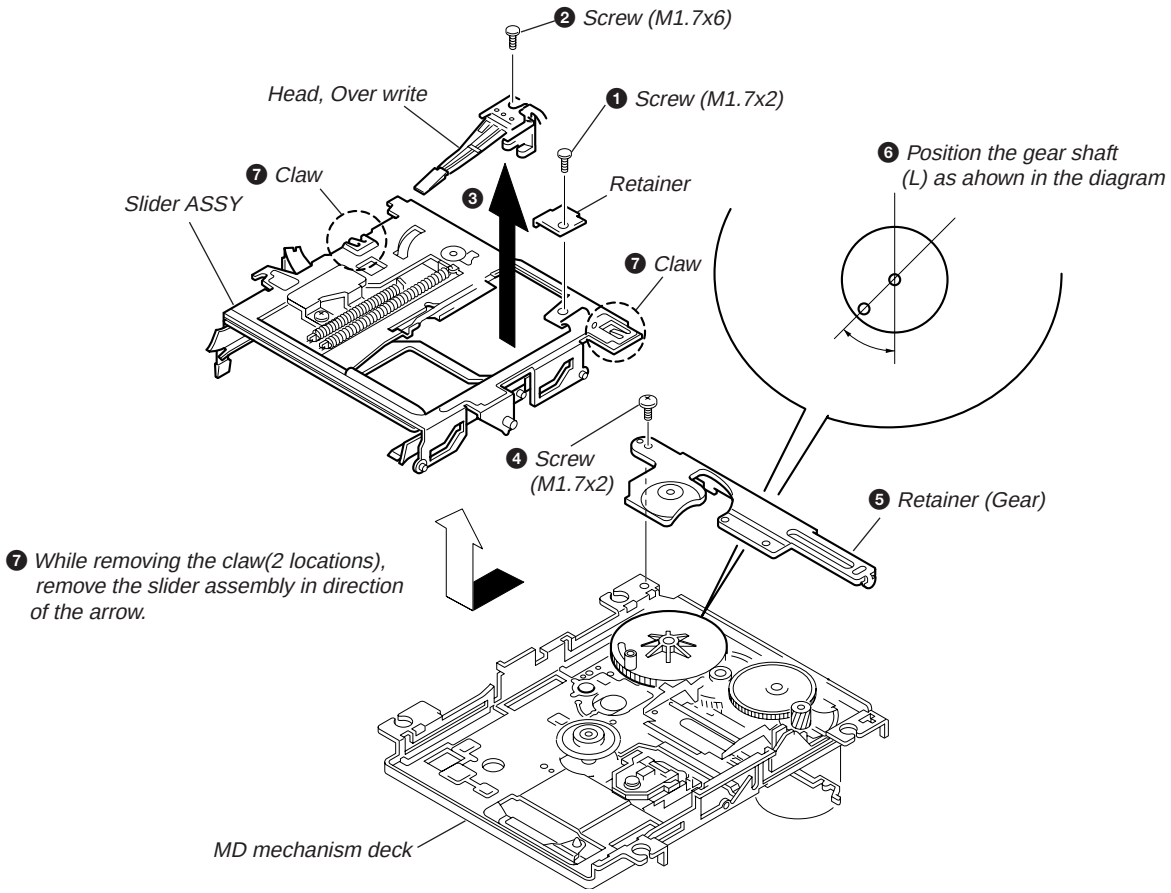
❷ Screw (M1.7x6)
Head, Over write
❶ Screw (M1.7x2)
❻ Position the gear shaft (L) as ahown in the diagram
❼ Claw
Slider ASSY
❸
Retainer
❼ Claw
❹ Screw (M1.7x2)
❺ Retainer (Gear)
❼ While removing the claw(2 locations), remove the slider assembly in direction of the arrow.
MD mechanism deck

● **CAUTION DURING SLIDER ASSY ASSEMBLY**

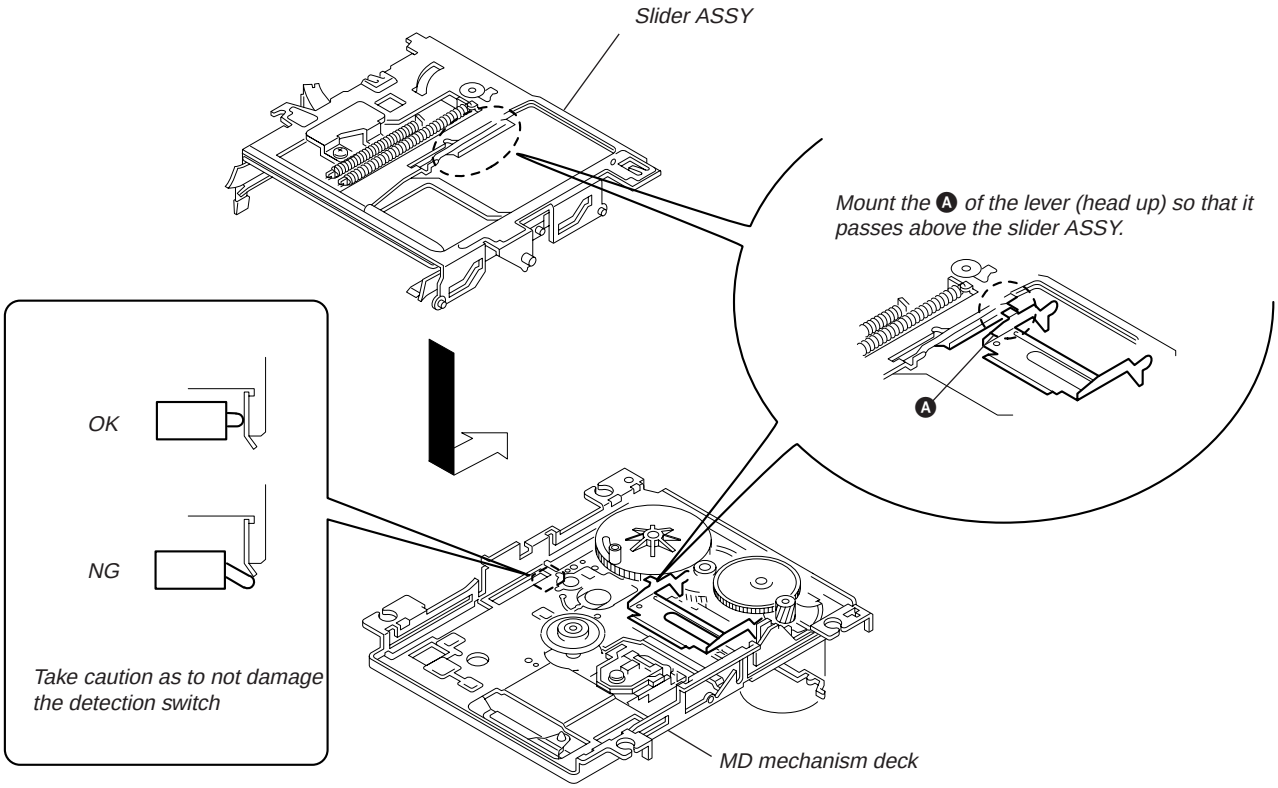
Slider ASSY
Mount the Ⓐ of the lever (head up) so that it passes above the slider ASSY.
Ⓐ
OK
NG
Take caution as to not damage the detection switch
MD mechanism deck

3-25. MD OPTICAL PICK-UP BLOCK

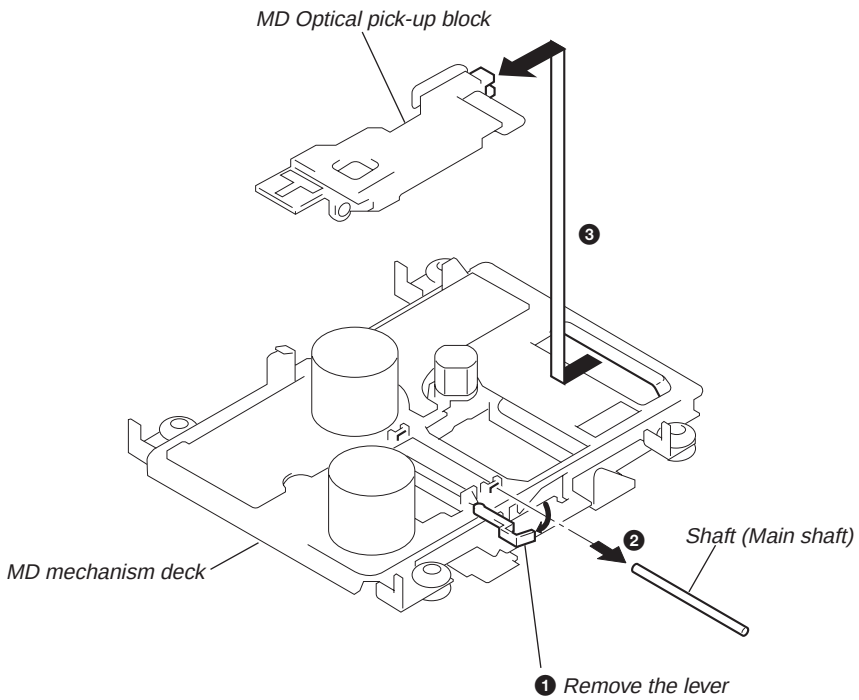

SECTION 4
TEST MODE

4-1. CAUTIONS WHEN USING THE TEST MODE

① Check to make sure the inserted disk is completed stopped before removing since loading related operations will operate regardless of the Test mode operation.
The rotation of the inserted disk will not stop even when pressing the MD EJECT button during continuous playback and continuous recording.
In this case, the disk will be ejected while still in motion.
Always press the NO/CANCEL button and check to see that the disk has stopped turning before pressing the MD EJECT button.

② In the Test mode, detection of the write-protect tab is not executed. For this reason, pressing the REC button in modes where the recording laser is emitted (see 4-1-1) will delete the recorded contents regardless of the tab position. When using a disk in the Test mode which its contents must not be deleted, avoid entering the Continuous Recording mode and Traverse Adjustment mode.

4-1-1. Modes which the record laser is emitted and button operations

- Continuous Recording mode (CREC MODE)
- Traverse Adjustment mode (EFBAL ADJUST)
- Laser Power Adjustment mode (LDPWR ADJUST)
- Laser Power Check mode (LDPWR CHECK)
- Traverse (MO) check (EF MO CHECK)
- Traverse (MO) adjustment (EF MO ADJUST)
- When pressing the REC button

4-2. TEST MODE SETTINGS

MD Test mode :
Press and hold the EDIT button and BASS/TREBLE button, then press MD ▶II → MD ■ → MD ▶II → MD ■.

CD Test mode :
Press and hold the EDIT button and BASS/TREBLE button, then press CD ▶II → CD ■ → CD ▶II → CD ■.

Display Test mode :
Press and hold the EDIT button and BASS/TREBLE button, then press BAND → LINE → BAND → LINE (FUNCTION is LINE).

Note 1 : Each test mode can be entered regardless of whether the power is on or off. However, it is not possible to enter the test mode of the particular function being operated. For example, it its not possible to enter the CD Test mode when the CD is in function.

4-3. RELEASING THE TEST MODE

Press the RESET button located on the bottom.

4-4. BASIC OPERATIONS OF THE TEST MODE

All operations are made using the AMS dial, YES/ENTER button and NO/CANCEL button.
The functions of each button are as follows:

Function Name	Functions
AMS dial	Used to change parameters and modes
YES/ENTER button	Used to advance and confirm
NO/CANCEL button	Used to return and cancel

4-5. SELECTING THE TEST MODE

There are 9 types of test modes (see table below). Turning the AMS dial clockwise switches modes shown in the table in the order from top to bottom. Turning the AMS dial counterclockwise switches modes shown in the table in the reverse order.

Display	Description
TEMP ADJUST	Temperature compensation offset adjustment
LDPWR ADJUST	Laser power adjustment
LDPWR CHECK	Laser power check
EF BAL ADJUST	Traverse adjustment
FBIAS ADJUST	Focus bias adjustment
FBIAS CHECK	Focus bias check
CPLAY MODE	Continuous playback mode
CREC MODE	Continuous recording mode
EEP MODE	Non-volatile storage memory control

- For details on each adjustment mode, see respective items of SECTION 5. ADJUSTMENT
- If you have accidently entered another mode, press the NO/CANCEL button to exit.
- The EEP MODE is not used during servicing. Thus, details on this mode are not given. If this mode is accidently entered, exit immediately by pressing the NO/CANCEL button as the unit may not operate correctly if the non-volatile storage memory being overwritten.

4-5-1. Operating in the Continuous Playback mode

1. Entering the Continuous Playback mode
   ① Insert a disk into the unit (either recordable or playback disk)
   ② Turn the AMS dial until “CPLAY MODE” is displayed.
   ③ Press the YES/ENTER button. The display will change to “CPLAY IN”.
   ④ When accessing is completed, the display will change to “C1= AD = ”.

   Note : The numbers of “ ” displayed indicate the error rate and “ADER”.

2. Changing the playback location
   ① Pressing the YES/ENTER button during continuous playback will change the display in the following manner, enabling change in the playback location.
   “CPLAY MID” → “CPLAY OUT” → “CPLAY IN” → “CPLAY MID”
   ② When accessing is completed, the display will change to “C1= AD = ”.

   Note : The numbers of “ ” displayed indicate the error rate and “ADER”.

3. Exiting the Continuous Playback mode
   ① Press the NO/CANCEL button. The display will change to “CPLAY MODE”.
   ② To remove the disk, press the MD EJECT button.

   Note : The playback initiate addresses of IN, MID and OUT are indicated below. To display the playback position, press the DISPLAY button and “CPLAY( )”.

IN	40h cluster
MID	300h cluster
OUT	700h cluster

4-5-2. Operating in the Continuous Recording mode

1. Entering the Continuous Recording mode
   ① Insert a disk that may be recorded into the unit (see Note 3)
   ② Turn the AMS dial until "CREC MODE" is displayed.
   ③ Press the YES/ENTER button. The display will change to "CREC MID".
   ④ When accessing is completed, the display will change to "CREC (□□□□□)".

   Note : The numbers of " □ " displayed indicate the record position address.
2. Changing the recording location
   ① Pressing the YES button during continuous recording will change the display in the following manner, enabling change in the recording location. During location change, the REC indicator will be off.

   "CPLAY MID" → "CPLAY OUT" → "CPLAY IN" (returns to "CPLAY MID")

   ② When accessing is completed, the display will change to "CREC (□□□□□)" and the REC indicator will light.

   Note : The numbers of " □ " displayed indicate the record position address.
3. Exiting the Continuous Recording mode
   ① Press the NO/CANCEL button. The display will change to "CREC MODE" and the REC indicator will turn off.
   ② To remove the disk, press the MD EJECT button.

   Note 1 : The record initiate addresses of IN, MID and OUT are indicated below. To display the record position, press the DISPLAY button and "CREC (□□□□□)" .
   IN 40h cluster
   MID 300h cluster
   OUT 700h cluster

   Note 2 : The NO/CANCEL button can be used at anytime to stop recording.

   Note 3 : Detection for the write-protect tab is not executed when in the test mode. Do not enter the Continuous Recording mode with a disk you do not wish to have deleted.

   Note 4 : Do not continuously record for more than 5 minutes.

   Note 5 : Make sure no vibration is applied to the unit during continuous recording.

4-5-3. Non-volatile storage memory mode (EEP mode)

This is the mode to read and write the contents of the non-volatile storage memory.
This mode is not used for servicing.
If you accidently enter this mode, exit immediately by pressing the NO/CANCEL button.

4-6. FUNCTIONS OF OTHER BUTTONS

Function Name	Main Description
EDIT + ▶II	Continuous playback when pressed during disk is stopped. Tracking servo ON/OFF when pressed during continuous playback
EDIT + ■	Stopping of continuous recording/playback
▶▶	The thread moves outward while the button is pressed
◀◀	The thread moves inward while the button is pressed
EDIT + REC	Record ON/OFF during continuous playback
EDIT + SYNCHRO REC	Switched between pit and groove every time the button is pressed
EDIT + SHUF/PGM	Spindle servo mode switch (CLV S ⟷ CLV A)
DISPLAY	Display contents are switched every time the button is pressed
MD EJECT	Eject disk
RESET	Exit the test mode

4-7. TEST MODE DISPLAY

The display will switch in the following sequence every time the DISPLAY button is pressed.

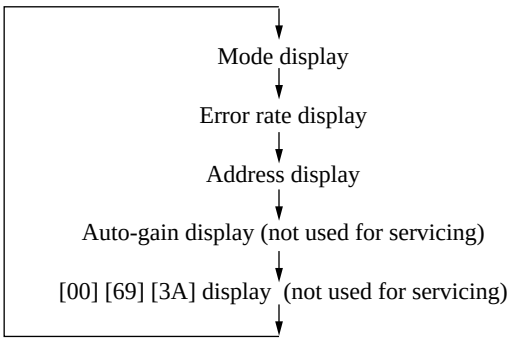
Mode display
Error rate display
Address display
Auto-gain display (not used for servicing)
[00] [69] [3A] display (not used for servicing)

1. Mode display
Displays such information as "TEMP ADJUST" and "CPLAY MODE".
2. Error rate display
The error rate is displayed using the following format.
C1=C1ER AD=ADER
3. Address display
The address is displayed using the following format (MO : recordable disk, CD : playback disk)
Switched between pit and groove every time the EDIT and SYNCHRO REC button is pressed
h = □□□□S = □□□□(MO pit and CD)
h = □□□□a = □□□□(MO groove)
h = : header address
S = : SUBQ address
a = : ATIP address

Note : "–" is displayed when servo is off.

4. Auto-gain display (not used for servicing)
The auto-gain is displayed using the following format.
AGF = @@ T = ## [&&]
@@ : focus servo gain coefficient
: tracking servo gain coefficient
&& : displays [OK], [NG] or [– –].
[– –] indicates that convergence is incomplete

Definitions of other displays

Display	Description	
	Indicator ON	Indicator OFF
SHUF	Continuous playback in operation (CLV : ON)	Disk stopped (CLV : OFF)
II	Tracking servo OFF	Tracking servo ON
REC, SHUF	Recording mode ON	Recording mode OFF
TOC EDIT	ABCD adjustment completed	
DIGITAL	Focus auto-gain OK	(Flashing) Focus OK Tracking auto-gain NG
TRACK	Pit	Groove
DISC mark	High reflection	Low reflection
DATE	CLV-S	CLV-A

SECTION 5
ADJUSTMENTS

MD SECTION

5-1. CAUTION WHEN CHECKING LASER DIODE EMISSION

Never look from directly above when checking the laser diode emission during adjustment as failure to do so may result in loss of eyesight.

5-2. CAUTIONS WHEN HANDLING THE OPTICAL PICK-UP (KMS-260A)

The laser diode within the optical pick-up is extremely vulnerable to static electricity. When handling, bridge the laser tap of the flexible board on the optical pick-up with solder.
When removing the connector, first bridge the laser tap with solder. Furthermore, do not remove the soldered bridge before reconnecting. In addition, take sufficient measures when working to prevent electrostatic damage. Take caution when handling the flexible board since it is easily torn.

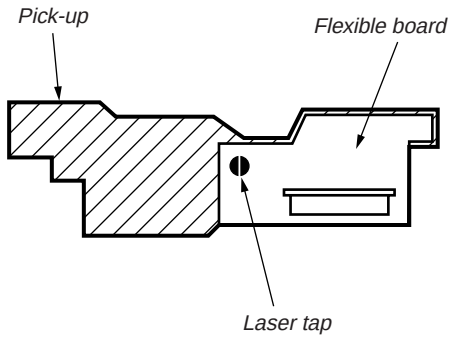

5-3. CAUTIONS DURING ADJUSTMENT

1) After replacing the following parts, make adjustments and checks for the table items where indicated with a O in the order given.

	Optical pickup	BD board		
		IC171	D101	IC101,IC121,IC192
1. Temperature compensation offset adjustment	X	O	O	O
2. Laser power adjustment	O	O	X	O
3. Traverse adjustment	O	O	X	O
4. Focus bias adjustment	O	O	X	O
5. Error rate check	O	O	X	O

2) Perform adjustments in the test mode.
Exit the test mode when completed with adjustment.
2) Perform adjustments in the order given.
3) Use the following jig and measuring equipment:
   - Check disk (MD) TDYS-I (Part no : 4-963-646-01)
   - Laser power meter LPM-8001 (Part no : J-2501-046-A)
   - Oscilloscope (perform measurement after calibrating the probe)
   - Digital voltmeter
   - Thermometer
   - BD board waveform checking jig (part no : J-2501-124-A)

5) When looking at multiple signals using oscilloscope, etc., make sure VC and GND are not connected within the oscilloscope. Failure to do so will short circuit VC and GND.
6) Using the special jig enables checking of the waveform without soldering (see page 4 of Service Notes).

5-4. CREATING A CONTINUOUS RECORDING DISK

- This disk is used during focus bias adjustment and error rate check. The procedure for creating a continuous recording disk is as follows.

1. Insert a disk (any commercially available blank disk).
2. Turn the AMS dial until “CREC MODE” is displayed.
3. Press the YES/ENTER button to display “CREC MID”. “CREC(0300)” will be displayed for an instant and recording will begin.
4. Complete recording within 5 minutes.
5. Press the NO/CANCEL button to stop recording.
6. Press the MD EJECT button to remove the disk.

A continuously recorded disk can be created by following the procedure above for focus bias adjustment and error rate check.

Note: Take caution as to not apply vibration to the unit during continuous recording.

5-5. TEMPERATURE COMPENSATION OFFSET ADJUSTMENT

The temperature data at the time is saved in the non-volatile storage memory as the standard data of 25°C.

Notes:

1. Do not make this adjustment under normal conditions.
2. Perform this adjustment in an environment with ambient temperature between 22 to 28°C. Furthermore, make the adjustment immediately after turning on the power when the internal temperature and ambient temperature are between 22 to 28°C.
3. After D101 replacement, perform the adjustment after the part has ample time to adjust to the ambient temperature.

Procedure:

1. Turn the AMS dial until “ TEMP ADJUST ” is displayed.
2. Press the YES/ENTER button and select the TEMP ADJUST mode.
3. “ TEMP= ▯▯ ” and the current temperature data will be displayed.
4. To save the data: press the YES/ENTER button
   To not save the data: press the NO/CANCEL button
5. After pressing the YES/ENTER button, “ TEMP= ▯▯ SAVE ” will be displayed momentarily and the display will then return to “ TEMP ADJUST ”.
   The display will immediately return to “ TEMP ADJUST ” when pressing the NO/CANCEL button.

Specified values:

The value of TEMP= ▯▯ must be within the range of E0-EF, F0-FF, 00-0F, 10-1F or 20-2F.

5-6. LASER POWER ADJUSTMENT

Connections:

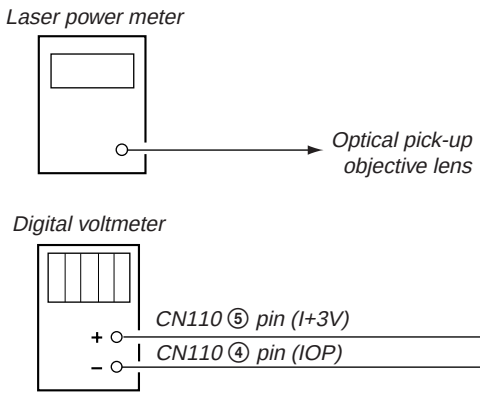

[BD BOARD] (SIDE A)

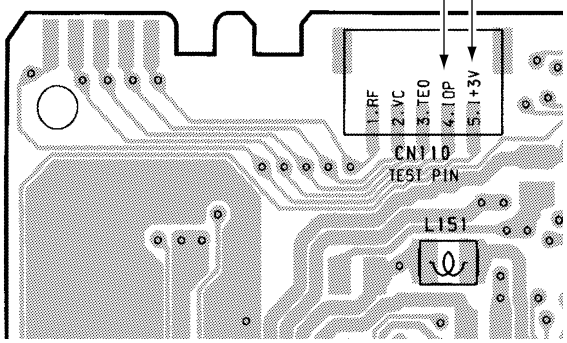

Procedure:

1. Insert the laser power meter into the disk loading port and set atop the objective lens of the optical pickup (if this cannot be done successfully, shift the optical pickup using the ◀◀ and ▶▶ buttons).
   Connect the digital voltmeter to the CN110 ⑤ pin (I+3V) and CN110 ④ pin (IOP).
2. Turn the AMS dial until " LDPWR ADJUST " is displayed. (Laser power: adjustment purposes)
3. Press the YES/ENTER button once to display " LD 0.9mW $ ▯▯ ".
4. Turn the AMS dial so that the laser power meter reading is between 0.86 – 0.92mW. After setting the range dial of the laser power meter to 10mW, press the YES/ENTER button to save the adjustment result to the non-volatile storage memory (at this time, " LD SAVE $ ▯▯ " will be displayed for an instant).
5. Next, " LD 7.0mW $ ▯▯ " will be displayed.
6. Turn the AMS dial so that the laser power meter reading is between 6.9 – 7.1mW, then press the YES/ENTER button to save the adjustment result (at this time, " LD SAVE $ ▯▯ " will be displayed for an instant).

Note: Do not emit the 7.0mW emission more than 15 seconds continuously.

7. Next, turn the AMS dial until " LDPWR CHECK " is displayed.
8. Press the YES/ENTER button once to display " LD 0.9mW $ ▯▯ ".
   At this time, check to see that the laser power meter reading is between 0.85 – 0.91mW.
9. Next, press the YES/ENTER button once more to display " LD 7.0mW $ ▯▯ ".
   At this time check to see that the laser power meter and digital voltmeter reading comply with the specified values.

Specified values:

Laser power meter reading : 6.9–7.1mW
Digital voltmeter reading : ±10% the value on the label of the optical pickup.

(Optical pick-up label)

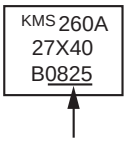

In this case, Iop = 82.5mA
Iop(mA) = digital voltmeter reading (mV)/1(Ω)

10. Press the NO/CANCEL button to display " LDPWR CHECK " and stop laser emission. (The NO/CANCEL button can be used at anytime to stop laser emission)

5-7. TRAVERSE ADJUSTMENT

Connection:

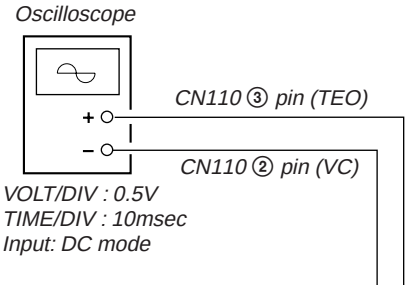

[BD BOARD] (SIDE A)

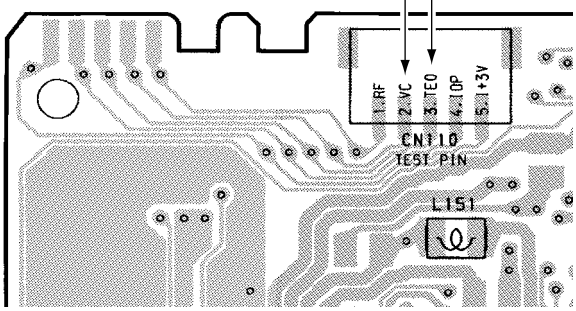

Procedure:

1. Connect the oscilloscope to the CN110 ③ pin (TEO) and CN110 ② pin (VC) of the BD board.
2. Insert a disk (any commercially available disk) that may be recorded on (see Note 1).
3. Press the ◀◀ or ▶▶ button to shift the optical pick-up to the outer edge of the pit.
4. Turn the AMS dial until " EFBAL ADJUST " is displayed.
5. Press the YES/ENTER button to display " EFB= ▯▯ MO-R ". (The unit will be in the condition of: laser power READ power, focus servo ON, tracking servo OFF and spindle (S) servo ON.)
6. Turn the AMS dial so that the waveform on the oscilloscope is that of the specified value (turning the AMS dial will change the numbers of " EFB= ▯▯ " as well as the waveform). During this adjustment, the waveform changes for approximately every 2%. Adjust the waveform closest to the specified value. (read power traverse adjustment)

(Traverse waveform)

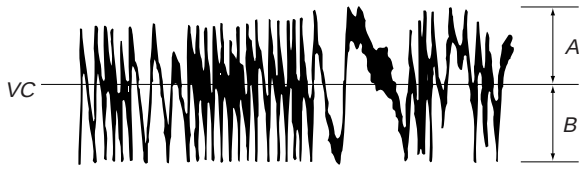

Specification: A=B

7. Press the YES/ENTER button to save the adjustment result to the non-volatile storage memory (at this time " EFB= □ SAVE " will be displayed for an instant, then " EFB= □ MO-W " will be displayed).
8. Turn the AMS dial so that the waveform on the oscilloscope is that of the specified value (turning the AMS dial will change the numbers of " EFB= □ " as well as the waveform). During this adjustment, the waveform changes for approximately every 2%. Adjust the waveform closest to the specified value.
(write power traverse adjustment)

(Traverse waveform)

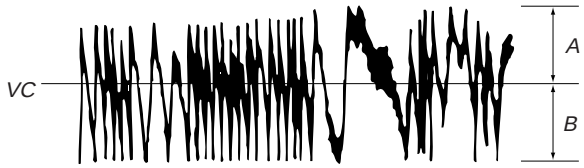

Specification: A=B

9. Press the YES/ENTER button to save the adjustment result to the non-volatile storage memory (at this time " EFB= □ SAVE " will be displayed for an instant).
10 " EFB= □ MO-P " will then be displayed and the servo will be activated after the optical pickup is automatically shifted to the inner edge of the pit.
11. At this time, turn the AMS dial so that the waveform on the oscilloscope is that of the specified value. During this adjustment, the waveform changes for approximately every 2%. Adjust the waveform closest to the specified value.

(Traverse waveform)

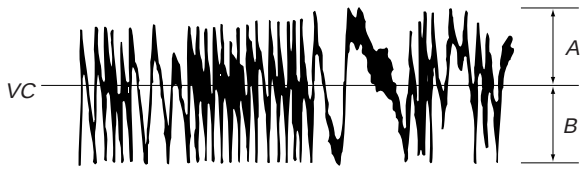

Specification: A=B

12. Press the YES/ENTER button to save the adjustment result to the non-volatile storage memory (at this time " EFB= □ SAVE " will be displayed for an instant). "EFBAL CD" will then be displayed and the rotation of the disk will automatically stop.
13. Press the MD EJECT button to remove the disk.
14. Insert the check disk (MD) TDYS-1.
15. Press the YES/ENTER button to display " EFB= □ CD ". The servo will automatically be activated.
16. Turn the AMS dial so that the waveform on the oscilloscope is that of the specified value. During this adjustment, the waveform changes for approximately every 2%. Adjust the waveform closest to the specified value.

(Traverse waveform)

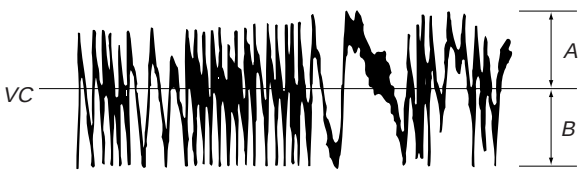

Specification: A=B

17. Press the YES/ENTER button to save the adjustment result to the non-volatile storage memory (at this time "EFB= □ SAVE" will be displayed for an instant). "EFBAL ADJUST" will then be displayed.
18. Press the MD EJECT button to remove the check disk (MD) TDYS-1.

Note 1: When using a pre-recorded disk for adjustment, data will be deleted during MO write.
Note 2: If the traverse waveform is hard to see, reconnect the oscilloscope as shown below for easier view.

Oscilloscope

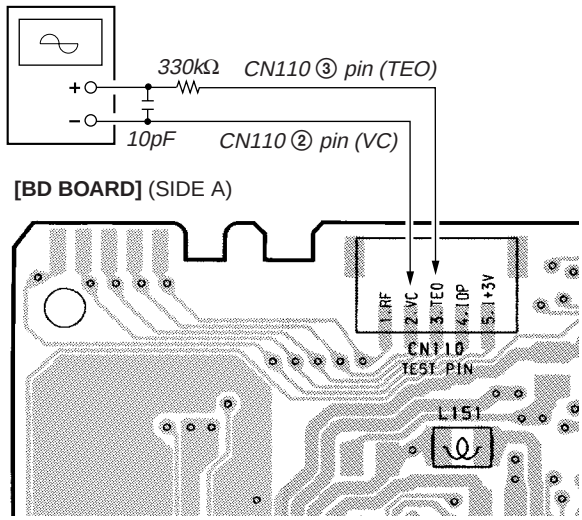

5-8. FOCUS BIAS ADJUSTMENT

Procedure:

1. Insert a continuously recorded disk (see 5-4. Creating a continuous recording disk).
2. Turn the AMS dial until "CPLAY MODE" is displayed.
3. Press the YES/ENTER button to display "CPLAY MID".
4. When "C1= □□□□ AD= □□ " is displayed, press the NO/CANCEL button.
5. Turn the AMS dial until "FBIAS ADJUST" is displayed.
6. Press the YES/ENTER button to display " □□□□ / □□ a= □□ ". The first 4 digits indicate the C1 error rate, the 2 digits following "/" indicate ADER and the 2 digits following "a=" indicate the focus bias volume.
7. Turn the AMS dial clockwise and search the focus bias volume closest to the C1 error rate of 220 (see Note 2).
8. Press the YES/ENTER button to display " □□□□ / □□ b= □□ ".
9. Turn the AMS dial counterclockwise and search the focus bias volume which is the C1 error rate of 220.
10. Press the YES/ENTER button to display " □□□□ / □□ c= □□ ".
11. Press the YES/ENTER button after making sure that the C1 error rate is below 50 and ADER is 00.
12. Press the YES/ENTER button if the value indicated in the " □□ - □□ - □□ (□□)" display is more than 20.
Otherwise, press the NO/CANCEL button and repeat procedure from step 2.
13. Press the MD EJECT button to remove the continuously recorded disk.

Note 1: The relationship of the C1 error and focus bias volume is shown in the diagram below. Find points a and b shown in the diagram by following the procedure above. The met focal point C is found by automatic calculation.
Note 2: The C1 error rate fluctuates. Thus, make the adjustment using the average value.

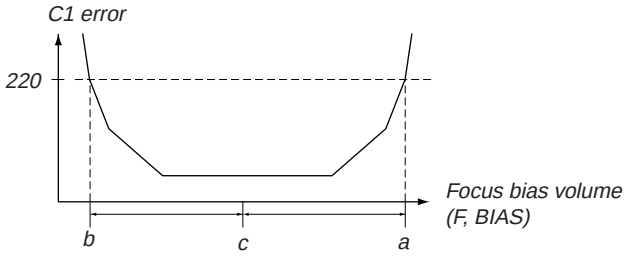

5-9. ERROR RATE CHECK

5-9-1. Pit disk error rate check

Procedure:

1. Insert the check disk (MD) TDYS-1
2. Turn the AMS dial until " CPLAY MODE " is displayed.
3. Press the YES/ENTER button to display " CPLAY MID ".
4. The display will change to " C1= [][][][] AD= [][] ".
5. Check to see that the C1 error rate is less than 20.
6. Press the NO/CANCEL button to stop playback, then press the MD EJECT button to remove the check disk (MD).

5-9-2. MO error rate check

Procedure:

1. Insert a continuously recorded disk (see 5-4. Creating a continuous recording disk).
2. Turn the AMS dial until " CPLAY MODE " is displayed.
3. Press the YES/ENTER button to display " CPLAY MID ".
4. The display will change to " C1= [][][][] AD= [][] ".
5. Check to see that the C1 error rate is less than 50 and ADER is constantly not above 00.
6. Press the NO/CANCEL button to stop playback, then press the button to remove the continuously recorded disk.

5-10. FOCUS BIAS CHECK

The focus tolerance volume is checked by changing the focus bias volume.

Procedure:

1. Insert a continuously recorded disk (see 5-4. Creating a continuous recording disk).
2. Turn the AMS dial until "CPLAY MODE" is displayed.
3. Press the YES/ENTER button to display "CPLAY MID".
4. When "C1= [][][][] AD= [][] " is displayed, press the NO/CANCEL button.
5. Turn the AMS dial until "FBIAS CHECK" is displayed.
6. Press the YES/ENTER button to display " [][][][] / [][] c= [][] ".
   The first 4 digits indicate the C1 error, the 2 digits following " / " indicate ADER and the 2 digits following "c=" indicate the focus bias volume.
   At this time, check to see that the C1 error is less than 50 and ADER is 00.
7. Press the YES/ENTER button to change the display to " [][][][] / [][] b= [][] "
   At this time check to see that the C1 error is not less than 220 and ADER is constantly not above 00.
8. Press the YES/ENTER button to change the display to " [][][][] / [][] a= [][] "
   At this time check to see that the C1 error is not less than 220 and ADER is constantly not above 00.
9. Press the NO/CANCEL button, then press the MD EJECT button to remove the continuously recorded disk.

Note 1: If the C1 error or ADER is more than 00 for only one of points a (8. above) and b (7. above), there is the possibility of a gap in the focus bias adjustment. In such case, repeat adjustment.

CD SECTION

1. Enter the CD Test mode
   (see page 19)

88 07 00 3A0

The above is the default display.
Pressing the ►II button will rotate the CD and pressing the YES/ENTER button once more will output sounds.
Pressing the YES/ENTER button will execute automatic adjustment and values will change; however, this value is quite normal.

2. RF LEVEL and jitter check
   Test mode PLAY status ("21" and "ALL" display ON)

21 07 00 3A0
ALL

ALL display ON : LPC (laser power control ON)
ALL display OFF : LPC (laser power control OFF)
(►II button : ALL display ON/OFF)

Connection Point:

[MAIN BOARD] (SIDE A)

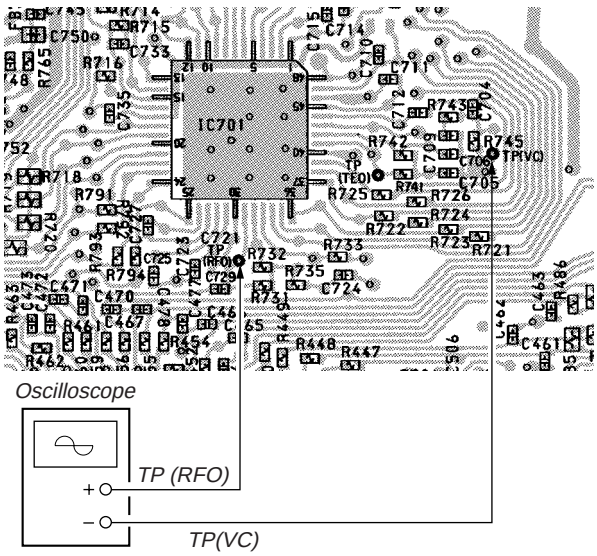

Check to see that the jitter is less than 9.0 nsec.
and RF level is between 1.0 – 1.5Vp-p.

VOLT/DIV : 200mV (using 10:1 probe)
TIME/DIV : 500ns

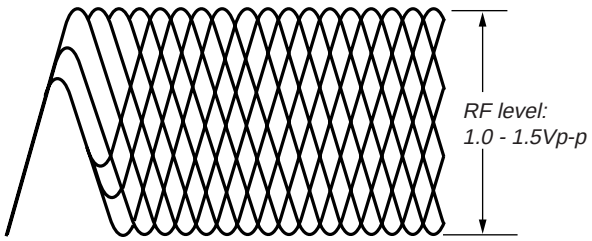

3. Traverse signal check

Connection Point:

[MAIN BOARD] (SIDE A)

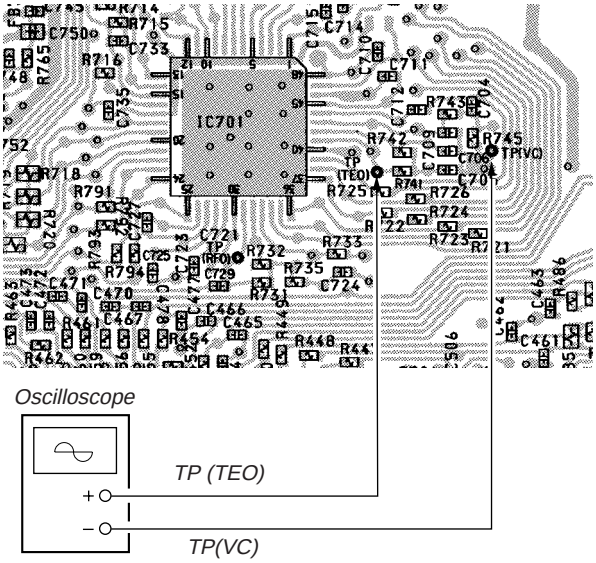

Press the FF or FR from step2.
Check to see that the traverse signal level is between 280 - 480mVp-p.

Note:
Extend the sweep time for easier view.

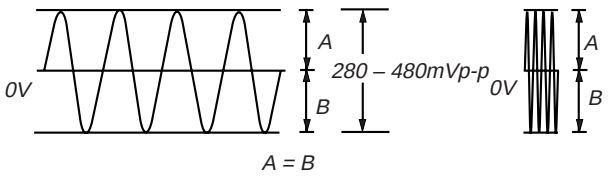

4. After completed with adjustment, press the RESET button to release the test mode.

DISPLAY SECTION

DIMMER ADJUSTMENT

1. Connect the LCD1 to the CN533 of the LCD board.
2. Connect the digital voltmeter to the CN533 ⑧ pin of the LCD board.
3. Adjust the RV550 of the LCD board for 2.83V reading on digital voltmeter.
   Standard value : 2.83 – 2.93V

Connection Point:

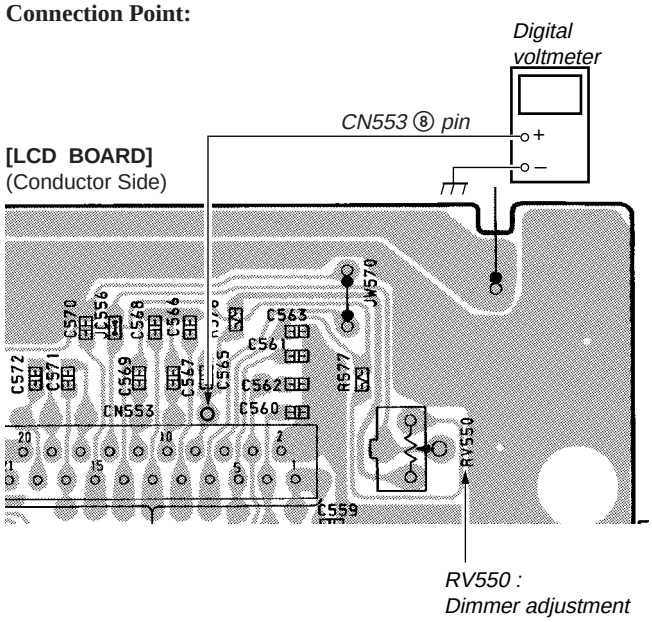

TUNER SECTION 0dB=1μV

AM Section

Function switch : MW or LW
Volume : MIN

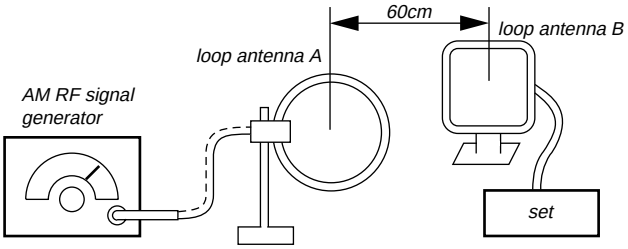

30% amplitude modulation by 400Hz signal
Output level : as low as possible

FM Section

Function switch : FM
Volume : MIN
FM ANTENNA SELECTOR switch : EXT

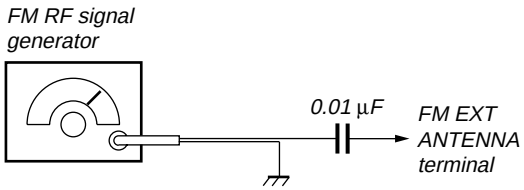

22.5kHz frequency deviation by 400Hz signal.
Output level : as low as possible

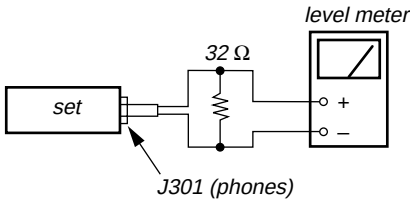

- Repeat the procedures in each adjustment several times, and the frequency coverage and tracking adjustments should be finally done by the trimmer capacitors.

MW/LW IF ADJUSTMENT	
Adjust for a maximum reading on level meter.	
CFT1	450kHz

MW FREQUENCY COVERAGE ADJUSTMENT		
Adjust part	Frequency display	reading on digital voltmeter.
L5	531kHz	Adjustment value :1.0V Standard value : 0.8 – 1.2V
CT4	1,611kHz	Adjustment value :5.4V Standard value : 5.0 – 5.8V

MW TRACKING ADJUSTMENT	
Adjust for a maximum reading on level meter.	
L4	621kHz
CT2	1,404kHz

LW FREQUENCY COVERAGE ADJUSTMENT		
Adjust part	Frequency display	reading on digital voltmeter
Confirmation	153kHz	Standard value : 0.5 – 0.9V
CT3	297kHz	Adjustment value :5.5V Standard value : 5.1 – 5.9V

LW TRACKING ADJUSTMENT	
Adjust for a maximum reading on level meter.	
L3	162kHz
CT1	261kHz

Connect and Adjustment Location :

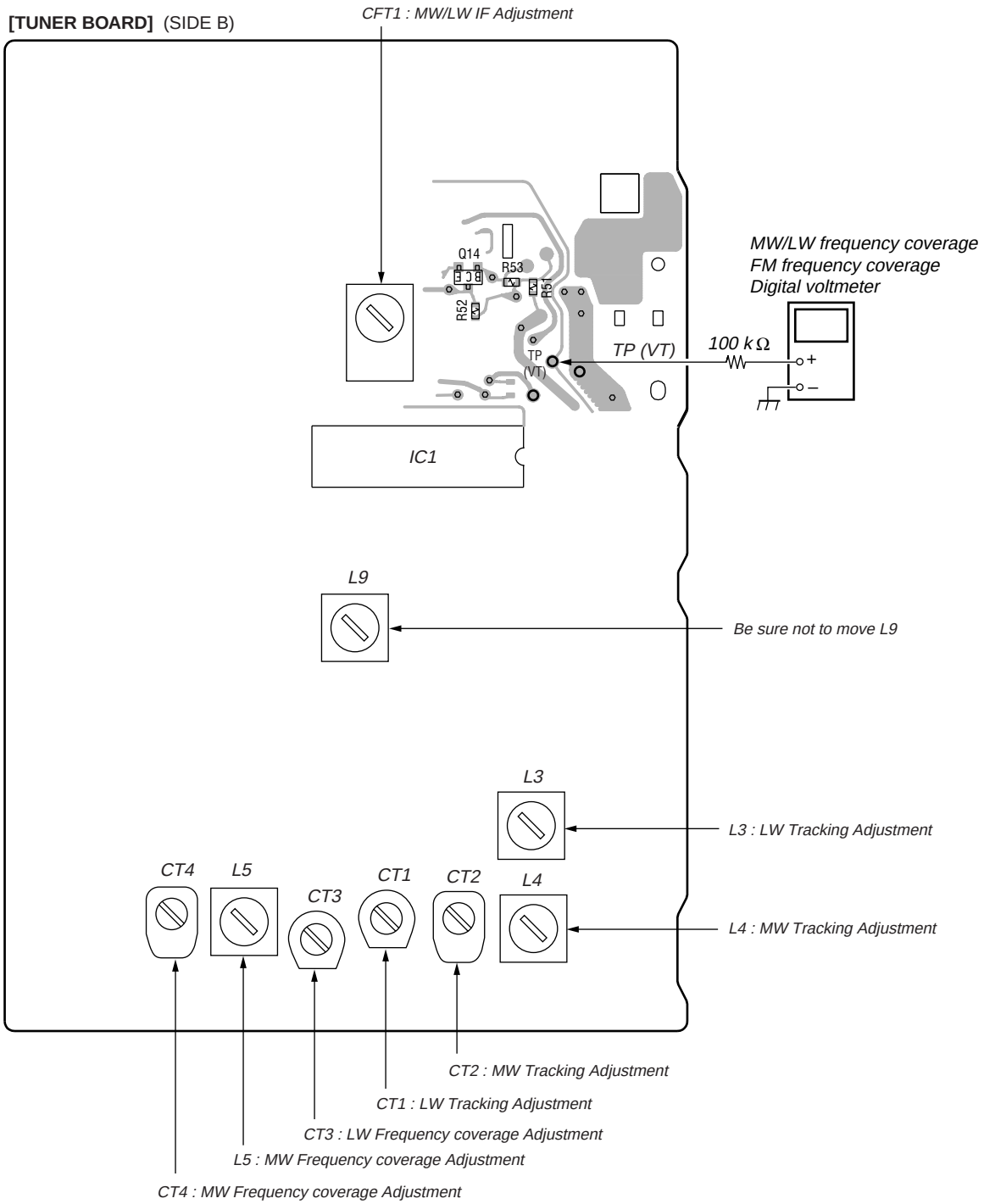

SECTION 6
DIAGRAMS

6-1. EXPLANATION OF IC TERMINALS

BD BOARD IC101 MD SECTION RF AMPLIFIER (CXA2523R)

Pin No.	Pin name	I/O	Description
1	I	I	Input of RF signal l converted from I to V
2	J	I	Input of RF signal J converted from I to V.
3	VC	O	Midpoint voltage (+1.5V) generation output.
4 - 9	A–F	I	Signal inputs from optical pickup detector.
10	PD	I	Light volume monitor input.
11	APC	O	Laser APC output.
12	APCREF	I	Reference voltage input for laser power setting.
13	GND	–	Ground.
14	TEMPI	I	Temperature sensor connection terminal.
15	TEMPR	O	Reference voltage output for temperature sensor.
16	SWDT	I	Serial data input from CXD2652AR.
17	SCLK	I	Serial clock input from CXD2652AR.
18	XLAT	I	Latch signal input from CXD2652AR. “L”: Latch
19	XSTBY	I	Standby signal input. “L”: Standby
20	FOCNT	I	Center frequency control voltage input of internal circuits BFF22, BPF3T and EQ from CXD2652AR.
21	VREF	O	Reference voltage output (not used).
22	EQADJ	I/O	Pin for center frequency setting of internal circuit EQ.
23	3TADJ	I/O	Pin for center frequency setting of internal circuit BPF3T.
24	VCC	–	Power supply (+3V).
25	WBLADJ	I/O	Pin for center frequency setting of internal circuit BPF22.
26	TE	O	Tracking error signal output to CXD2652AR.
27	CSLED	–	External condenser connector pin for thread error signal LPF.
28	SE	O	Thread error signal output to CXD2652AR.
29	ADFM	O	ADIP FM signal output.
30	ADIN	I	ADIP signal comparator input ADFM connection by coupling with AC.
31	ADAGC	–	External condenser connector pin for AGC of ADIP.
32	ADFG	O	ADIP duplex signal output to CXD2652AR.
33	AUX	O	I3 signal/temperature signal output (switched by serial command) to CXD2652AR.
34	FE	O	Focus error signal output to CXD2652AR.
35	ABCD	O	Light volume signal output to CXD2652AR.
36	BOTM	O	RF/ABCD bottom hold signal output to CXD2652AR.
37	PEAK	O	RF/ABCD peak hold signal output to CXD2652AR.
38	RF	O	RF equalizer output to CXD2652AR.
39	RFAGC	–	RF AGC circuit external condenser connector pin.
40	AGCI	I	Input RF amplifier output is input to RF AGC circuit by coupling with AC.
41	COMPO	O	User comparator output (not used).
42	COMPP	I	User comparator input (Fixed at “L”).
43	ADDC	I/O	Low-pass cutoff external capacitor terminal of ADIP amplifier.
44	OPO	O	User op amplifier output (not used).
45	OPN	I	User op amplefier inverted input (Fixed at “L”).
46	RFO	O	RF amplifier output.
47	MORFI	I	Group RF signal input by coupling with AC.
48	MORFO	O	Group RF signal output.

APC : Auto Power Control
AGC : Auto Gain Control

MAIN BOARD (2/2) IC405 SYSTEM CONTROL (CXP740096-026Q)

Pin No.	Pin name	I/O	Description
1	MD	O	MD function output.
2	RADIO/LINE	O	Radio/LINE function output.
3	ACCHK	I	AC power supply detection input. L : Supplied H : Not supplied
4	NC	–	Not used (OPEN).
5	NC	–	Not used (OPEN).
6	NC	–	Not used (OPEN).
7	RDS - DATA	I	RDS serial data input.
8	NC	–	Not used (OPEN).
9	RDS - CLK	I	RDS serial clock input.
10	CD - TURN	I	CD ON/OFF detection input.
11	NC	–	Not used (OPEN).
12	CD - OPEN	O	CD tray control output. H : OPEN
13	CD - CLOSE	O	CD tray control output. H : CLOSE
14	NC	–	Not used (OPEN).
15	NC	–	Not used (OPEN).
16	NC	–	Not used (OPEN).
17	MD - H	O	D/A converter down signal output (MD play).
18	REC - H	O	D/A converter down signal output (MD recording).
19	MD - RST	O	Reset signal output for MD system control.
20	MD - SCTS	O	UART send request output to MD.
21	MD - SRTS	I	UART send request input from MD.
22	MD - PDOWN	O	Notification of power cutoff to MD.
23	D/LCON	O	Back light ON/OFF control output.
24	LCD - RST	O	Reset signal output to LCD.
25	LCD - CE	O	Chip enable output to LCD.
26	LCD - A0	O	Address output to LCD.
27	LED - MD	O	MD LED drive output.
28	LED - RADIO	O	BAND LED drive output.
29	LED - CD	O	CD LED drive output.
30	NC	–	Not used (OPEN).
31	RADIO POWER	O	Radio power supply ON/OFF control output.
32	CD POWER	O	CD power supply ON/OFF control output.
33	NC	–	Not used (OPEN).
34	NC	–	Not used (OPEN).
35	NC	–	Not used (OPEN).
36	NC	–	Not used (OPEN).
37	NC	–	Not used (OPEN).
38	NC	–	Not used (OPEN).
39	TU - SFT	O	System clock shift output.
40	RST	I	System reset terminal.
41	VSS	–	Ground.
42	XTAL	I	System clock (8MHz) oscillation input.
43	EXTAL	O	System clock (8MHz) oscillation output.
44	SELECT - GND	O	Destination select terminal.
45	HP - SW	I	Headphone detection input.
46	LCD - DATA	O	Serial data output to LCD.
47	LCD - CLK	O	Serial clock output to LCD.
48	CD - DOOR	I	CD tray Open/Close detection input.
49	JOG - A	I	Jog dial rotation detection input (A).
50	JOG - B	I	Jog dial rotation detection input (B).

Pin No.	Pin name	I/O	Description
51	SELECT	I	Destination select detection input.
52	AVSS	–	A/D converter ground terminal.
53	AVREF	–	A/D converter reference voltage input.
54	AVDD	–	A/D converter power supply terminal.
55	LED - PRESET/AMS	O	AMS/PRESET LED drive output.
56	LED - SELECT	O	SELECT LED drive output.
57	LINE	O	Function LINE output.
58	LINE - LEVEL	O	LINE level control signal output.
59	KEY4	I	Key input (4).
60	KEY3	I	Key input (3).
61	KEY2	I	Key input (2).
62	KEY1	I	Key input (1).
63	TU - MUTE	O	Radio mute drive signal output.
64	TU - COUNT	I	Radio PLL data input.
65	TU - CLK	O	Radio PLL clock output.
66	TU - DATA	O	Radio PLL data output.
67	TU - CE	O	Radio PLL chip enable output.
68	NC	–	Not used (OPEN).
69	MD - SRXD	I	Communicate with MD and UART receive input.
70	MD - STXD	O	Communicate with MD and UART send output.
71	NC	–	Not used (OPEN).
72	NC	–	Not used (OPEN).
73	CD - XRST	O	CD system reset signal output.
74	CD - CLK	O	CD serial clock output.
75	CD - XLAT	O	CD system lack output.
76	CD - DATA	O	CD serial data output.
77	CD - SENSE1	I	CD SENSE 1 input.
78	CD - SCOR	I	CD SCOR input.
79	CD - SQSO	I	CD SUB Q data input.
80	CD - SHORT	I	CD POWER circuit short detection input.
81	CD - SQCK	O	CD SUB Q clock output.
82	CD - MUTE	O	CD system mute output.
83	CD - FOK	I	CD FOK input.
84	CD - SENSE2	I	CD SENSE 2 input.
85	RMC	I	Remote control signal input.
86	TEX	I	Real clock oscillation input (32.768kHz).
87	TX	O	Real clock oscillation output (32.768kHz).
88	VSS	–	Ground.
89	VDD	–	Power supply terminal.
90	NC	–	Not used (OPEN).
91	NC	–	Not used (OPEN).
92	NC	–	Not used (OPEN).
93	SPEED - L	O	Open/Close motor drive output.
94	AU - DATA	O	AUDIO data output.
95	AU - CLK	O	AUDIO clock output.
96	B/L - CONT	O	Back light ON/OFF control output.
97	PA - STANDBY	O	Power amplifier ON/Standby control output.
98	AMUTE	O	Audio mute signal output.
99	CD	O	CD function output.
100	P - CON	O	POWER ON/OFF control.

• BD BOARD IC121 digital signal processor, digital servo signal processor, EFM/ACIRC encoder/decoder, shock-proof memory controller, ATRAC encoder/decoder, 2Mbit DRAM (CXD2652AR)

Pin No.	Pin name	I/O	Description
1	MNT0(FOK)	O	FOK signal output to system control. H is outputted when in focus.
2	MNT1(SHCK)	O	Track-jump detection signal output to system control.
3	MNT2(XBUSY)	O	Monitor 2 output to system control.
4	MNT3(SLOC)	O	Monitor 3 output to system control.
5	SWDT	I	Write-data signal input from system control.
6	SCLK	I(S)	Serial clock signal input from system control.
7	XLAT	I(S)	Serial latch signal input from system control.
8	SRDT	O(3)	Read-data signal output to system control .
9	SENS	O(3)	Internal status (SENSE) output to system control.
10	XRST	I(S)	Reset signal input from system control. "L": Reset
11	SQSY	O	Subcode Q-SYNC (SCOR) output to system control. Majority of those which output "L" every 13.3 seconds output "H".
12	DQSY	O	Subcode of digital-in U-bit CD format to system control. Majority of those which outputs "L" every 13.3 seconds during output of Q-SYNG (SCOR) outputs "H".
13	RECP	I	Laser power switch input from system control "H": Record, "L": Playback.
14	XINT	O	Interrupt status output to system control.
15	TX	I	Record data output authorization input from system control.
16	OSCI	I	System clock input (512Fs = 22.5792MHz).
17	OSCO	O	System clock output (512FS = 22.5792MHz).
18	XTSL	I	Pin for system clock frequency setting . "L": 45.1584MHz "H": 22.5792MHz (Fixed at "H").
19	TEST G	–	Test terminal.
20	DVSS	–	Ground (digital system).
21	DIN	I	Digital audio input (for optical input).
22	DOUT	O	Digital audio output (for optical output).
23	ADDT	I	Data input from A/D converter.
24	DADT	O	Data output to D/A converter.
25	LRCK	O	LR clock output (44.1kHz) for A/D and D/A converters.
26	XBCK	O	Bit clock output (2.8224MHz) for A/D and D/A converters.
27	FS256	O	11.2896MHz clock output (unused).
28	DVDD	–	Power supply for digital (+3V).
29–32	A03–A00	O	DRAM address outputs.
33	A10	O	
34–38	A04–A08	O	
39	A11	O	
40	DVSS	–	Ground for digital.
41	XOE	O	DRAM output-enable output.
42	XCAS	O	DRAM CAS signal output.
43	A09	O	DRAM address output.
44	XRAS	O	DRAM RAS signal output.
45	XWE	O	DRAM write-enable signal output.
46	D1	I/O	DRAM data I/O.
47	D0	I/O	
48, 49	D2,D3	I/O	
50	MVCI	I(S)	Clock input from external VCO (Fixed at "L").

* In the I/O column, I(S) is Schmitt input, I(A) is analog input, O(3) is state output and O(A) is analog output.

Pin No.	Pin name	I/O	Description
51	ASYO	O	Playback EFM duplex signal output.
52	ASYI	I(A)	Playback EFM comparator slice level input.
53	AVDD	–	Power supply for analog (+3V).
54	BIAS	I(A)	Playback EFM comparator bias current input.
55	RFI	I(A)	Playback EFM RF signal input.
56	AVSS	–	Ground for analog.
57	PDO	O(3)	Phase comparison output for clock playback analog PLL of playback EFM (not used).
58	PCO	O(3)	Phase comparison output for record/playback EFM system master PLL.
59	FILI	I(A)	Filter input for record/playback EFM system master PLL.
60	FILO	O(A)	Filter output for record/playback EFM system master PLL.
61	CLTV	I(A)	Internal VCO control voltage input for record/playback EFM system master PLL15.
62	PEAK	I(A)	Light volume signal peak hold input from CXA2523AR.
63	BOTM	I(A)	Light volume signal bottom hold input from CXA2523AR.
64	ABCD	I(A)	Light volume signal input from CXA2523AR.
65	FE	I(A)	Focus error signal input from CXA2523AR.
66	AUX1	I(A)	Auxiliary A/D input.
67	VC	I(A)	Midpoint voltage (+1.5V) input from CXA2523AR.
68	ADIO	O(A)	A/D converter input signal monitor output (not used).
69	AVDD	–	Power supply for analog (+3V).
70	ADRT	I(A)	A/D converter operating range upper limit voltage input (Fixed at "H") .
71	ADRB	I(A)	A/D converter operating range lower limit voltage input (Fixed at "L").
72	AVSS	–	Ground for analog.
73	SE	I(A)	Thread error signal input from CXA2523AR.
74	TE	I(A)	Tracking error signal input from CXA2523AR.
75	AUX2	I(A)	Auxiliary A/D input (Fixed at "L").
76	DCHG	I(A)	Connected to +3V power supply.
77	APC	I(A)	Laser digital APC error signal input (Fixed at "L").
78	ADFG	I(S)	ADIP duplex FM signal input (22.05±1kHz) from CXA2523AR.
79	F0CNT	O	Filter f0 control output from CXA2523AR.
80	XLRF	O	Control latch output from CXA2523AR.
81	CKRF	O	Control clock output from CXA2523AR.
82	DTRF	O	Control data output from CXA2523AR.
83	APCREF	O	Laser APC reference PWM output.
84	LDDR	O	Laser digital APC PWM output (not used).
85	TRDR	O	Tracking servo drive PWM output (-).
86	TFDR	O	Tracking servo drive PWM output (+).
87	DVDD	–	Power supply for digital (+3V).
88	FFDR	O	Focus servo drive PWM output (+).
89	FRDR	O	Focus servo drive PWM output (-).
90	FS4	O	176.4kHz clock signal output (X'tal) (not used).
91	SRDR	O	Thread servo drive PWM output (-).
92	SFDR	O	Thread servo drive PWM output (+).
93	SPRD	O	Spindle servo drive PWM output (-).
94	SPFD	O	Spindle servo drive PWM output (+).
95	FGIN	I(S)	Spindle CAV servo FG input.
96–98	TEST1–TEST3	I	Test input pins (Fixed at "L").
99	DVSS	–	Ground for digital.
100	EFMO	O	EFM output during recording.

EFM : Eight to Fourteen Modulation
PLL : Phase Locked Loop
VCO : Voltage Controlled Oscillator

DG BOARD IC601 SYSYTEM CONTROL (RU8X12MF-0021)

Pin No.	Pin name	I/O	Description
1	DAOUT0	–	not used (OPEN).
2	DAOUOT1	–	not used (OPEN).
3	KEY0	–	Reserved ("H" level).
4	KEY1	–	Reserved ("H" level).
5	KEY2	–	Reserved ("H" level).
6	CHACK IN	I	Detection input from chucking-in switch (S685).
7	PACK IN	I	Detection input from back-in switch (not used).
8	PACK OUT	I	Detection input from back-out switch (S686).
9		–	not used (ground connection).
10		–	not used (ground connection).
11	AVSS	–	ground for analog.
12	X INT	I	Interrupt status input from digital signal processor IC (IC121).
13	PDOWN	I	Power cutoff signal input from master control IC (IC801).
14		–	Reserved (ground connection).
15	SQSY	I	Subcode Q-SYNC (SCOR) input from digital signal processor IC (IC121).
16	DQSY	I	Digital-in U-bit format subcode input from digital signal processor IC (IC121).
17		–	Reserved (ground connection).
18		–	Reserved (ground connection).
19		–	Reserved (ground connection).
20	$\overline{\text{SYS-RST}}$	I	System reset input pin "L": Reset.
21	TEST	I	Test mode pin "L": Normal mode, "H": Test mode.
22	+3.3V	–	Power supply terminal (VCC).
23	VBAT	I	Power supply pin for internal RTC and RAM.
24	XOUT-T	O	Sub-clock connector pin (32.768kHz).
25	XINT-T	I	Sub-clock connector pin (32.768kHz).
26	GND	–	Power supply terminal (ground).
27	XOUT	O	Main clock connector pin (12MHz).
28	XIN	I	Main clock connector pin (12MHz).
29	EXEM	I	Switch pin for External ROM mode and Internal ROM mode.
30	S1	–	not used (OPEN).
31		–	Reserved (ground connection).
32	SENS	I	Internal status (SENSE) input from digital signal processor IC (IC121).
33	SHOCK	I	Track-jump detection signal input from digital signal processor IC (IC121).
34		–	Reserved (ground connection).
35		–	Reserved (ground connection).
36	STB	O	Power ON/OFF control signal output.
37	REC P	I	Detection input from REC switch (S688).
38	PB P	I	Detection input from PB switch (S687).
39	LD LOW	O	Loading motor control signal output.
40	NC	–	not used (OPEN).
41	MNT2	I	Monitor 2 input from digital signal processor IC (IC121).
42	MNT3	I	Monitor 3 input from digital signal processor IC (IC121).
43	LEDO	–	not used (OPEN).
44		–	Reserved (ground connection).
45		–	Reserved (ground connection).
46	RST LOW	–	not used (OPEN).
47	GND	–	Power supply terminal (ground).
48	+3.3V	–	Power supply terminal (VCC).
49	SNG/CHG	–	Reserved (ground connection).
50	JOG1	–	Reserved (ground connection).

Pin No.	Pin name	I/O	Description
51	JOG0	–	Reserved (ground connection).
52	SDA	I/O	Serial data I/O with EEPROM (IC171).
53	SCL	O	Serial clock output to EEPROM (IC171).
54	2M/4M	–	Reserved ("H" level).
55		–	Reserved (ground connection).
56		–	Reserved (ground connection).
57	RXD (UART)	O	Communication with master control IC (IC801) and UART receive output.
58	TXD (UART)	I	Communication with master control IC (IC801) and UART send input.
59	RTS (T)	I	UART send request input from master control IC (IC801).
60	CTS (R)	O	UART send request output to master control IC (IC801).
61	AUBIT0	–	Reserved ("H" level).
62	AUBIT1	–	Reserved (ground connection).
63	CLKSET0	–	Reserved (ground connection).
64	CLKSET1	–	Reserved (ground connection).
65	GND	–	Power supply pin (ground).
66	+3.3V	–	power supply pin (VCC).
67	SCLK	O	Serial clock output to digital signal processor IC (IC201).
68	SWDT	O	Write data signal output to digital signal processor IC (IC121).
69	SRDT	I	Read data signal input from digital signal processor IC (IC121).
70	EMP	O	Delmphasis ON/OFF control signal output.
71	SCK1	–	not used (OPEN).
72	SOUT1	–	not used (OPEN).
73	SIN1	–	not used (OPEN).
74	CSB	–	Reserved (VCC connection).
75	LDON	O	Laser ON/OFF control signal output.
76	PIT/GRV	–	not used (OPEN).
77	FOK	I	Focus OK signal input from digital signal processor IC (IC121).
78		–	not used (OPEN).
79	LOCK	–	not used (OPEN).
80	WRPWR	O	Laser power switch signal output to digital signal processor IC (IC121).
81	$\overline{\text{DIG-RST}}$	O	Reset signal output.
82		–	not used (OPEN).
83	$\overline{\text{DA-RST}}$	O	Reset signal output to D/A and A/D converters "L": reset.
84	DSEL-A	–	not used (OPEN).
85	DSEL-B	–	not used (OPEN).
86	MOD	O	MD module ON/OFF control signal output.
87	REC/$\overline{\text{PB}}$	–	not used (OPEN).
88		–	not used (OPEN).
89	SCTX	O	Record data output authorization signal output.
90	XLATCH	O	Serial latch signal output to digital signal processor IC (IC121).
91		–	not used (OPEN).
92		–	not used (OPEN).
93	AMUTE	–	not used (OPEN).
94	LD OUT	O	Loading motor F control signal output.
95	LD IN	O	Loading motor F control signal output.
96	LIMIT IN	I	Detection input from limit switch (S681).
97	PROTECT	I	Record tab detection input from disk write-protect switch (S683).
98	REFLECT	I	Disk reflection rate detection input from reflect switch (S682).
99	GND	–	Power supply terminal (ground).
100	+3.3V	–	Power supply terminal (VCC).

6-2. BLOCK DIAGRAM (MAIN SECTION)

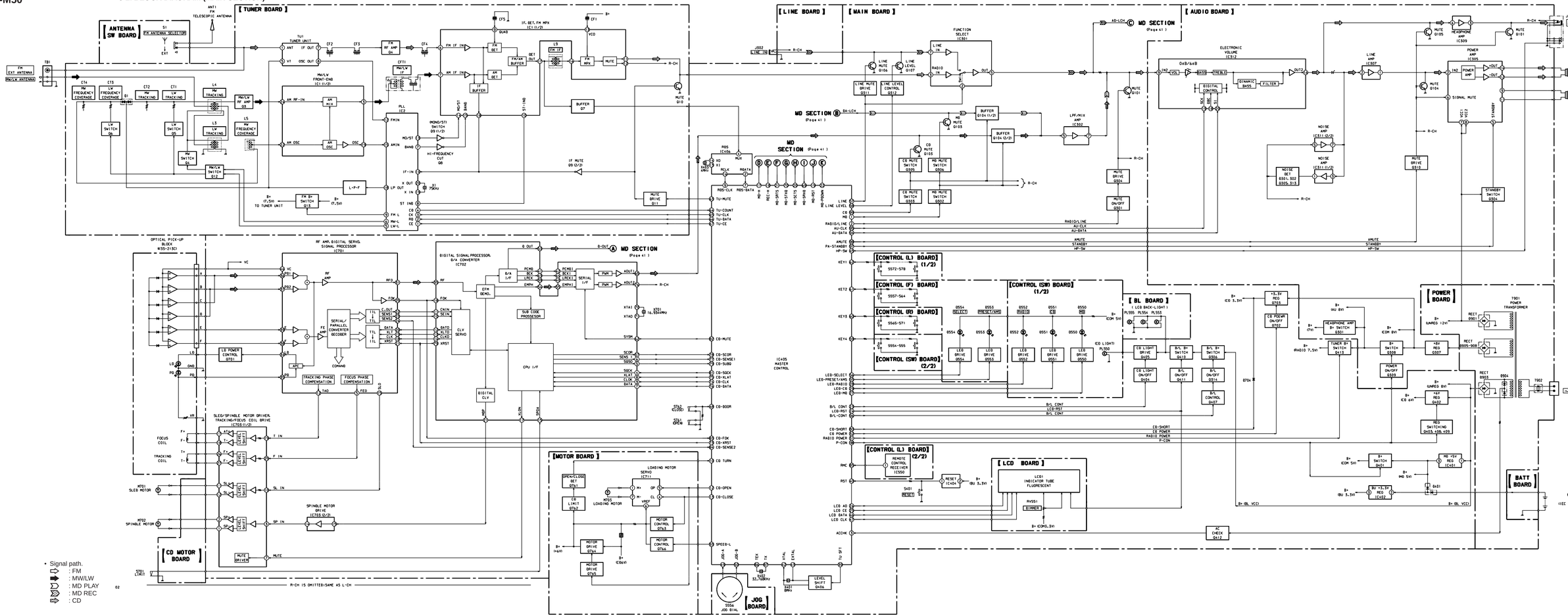

6-3. BLOCK DIAGRAM (MD SECTION)

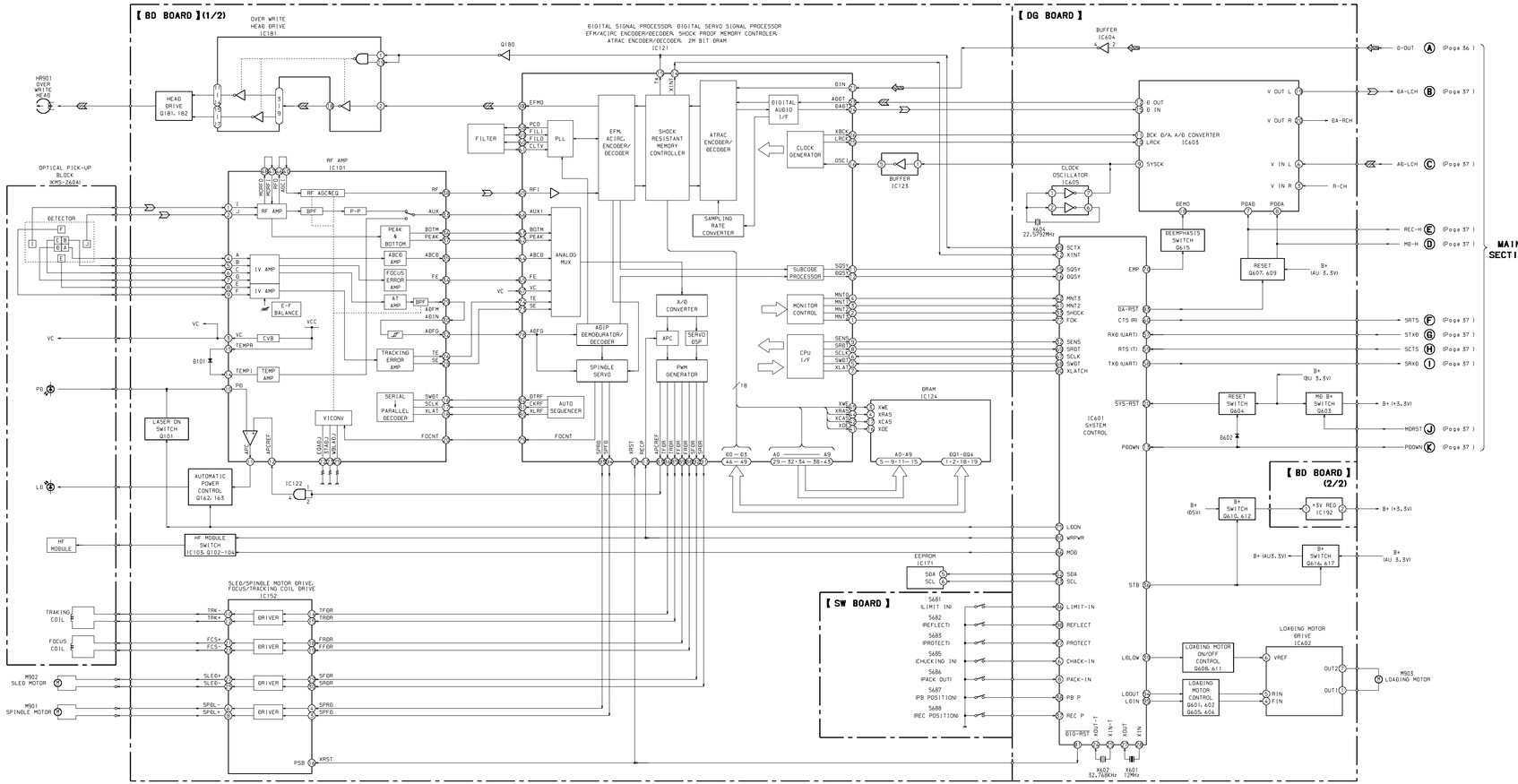

● Circuit Boards Location

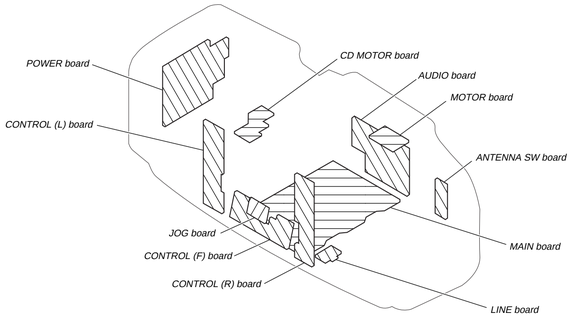

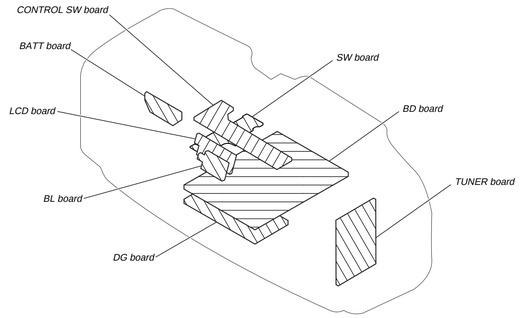

• Signal path.
: MD PLAY
: MD REC
: CD

6-4. PRINTED WIRING BOARDS – MAIN SECTION – • Refer to page 42 for Circuit Boards Location.

• **Semiconductor Location**

Ref. No.	Location	Ref. No.	Location
D308	D-2	Q203	D-17
D309	D-2	Q204	D-18
D401	G-12		
D402	F-14	Q206	C-7
D405	H-6	Q207	B-24
		Q301	B-17
D406	H-6	Q302	E-16
D407	G-17	Q303	E-17
D701	C-18		
D702	C-19	Q304	B-17
D703	B-13	Q305	D-14
		Q306	D-15
D704	B-12	Q311	C-25
D761	H-2	Q312	C-24
D762	H-2		
		Q401	E-7
		Q402	F-14
IC301	D-7	Q403	F-17
IC302	C-14	Q404	H-24
IC401	G-14	Q405	H-7
IC402	G-12		
IC403	H-12	Q406	F-22
		Q407	G-19
IC404	F-12	Q408	F-17
IC405	F-21	Q409	F-17
IC701	D-21	Q410	H-7
IC702	D-19		
IC703	C-8	Q411	H-24
		Q412	G-19
IC711	H-2	Q413	B-7
		Q701	C-11
		Q702	C-13
Q101	B-18		
Q102	E-17	Q703	B-12
Q103	D-17	Q761	J-3
Q104	C-18	Q762	J-3
Q106	C-6	Q763	H-3
		Q764	J-2
Q107	B-24		
Q201	B-18	Q765	J-3
Q202	D-17	Q766	G-3

Note:
- ◇—— : parts extracted from the component side.
- ○ : Through hole.
- ▒▒▒ : Pattern from the side which enables seeing.

(The other layers' patterns are not indicated.)

Caution:	
Pattern face side: (Side B)	Parts on the pattern face side seen from the pattern face are indicated.
Parts face side: (Side A)	Parts on the parts face side seen from the parts face are indicated.

【CD MOTOR BOARD】

【LINE BOARD】

【MOTOR BOARD】

【MAIN BOARD】 (SIDE B)

【MAIN BOARD】 (SIDE A)

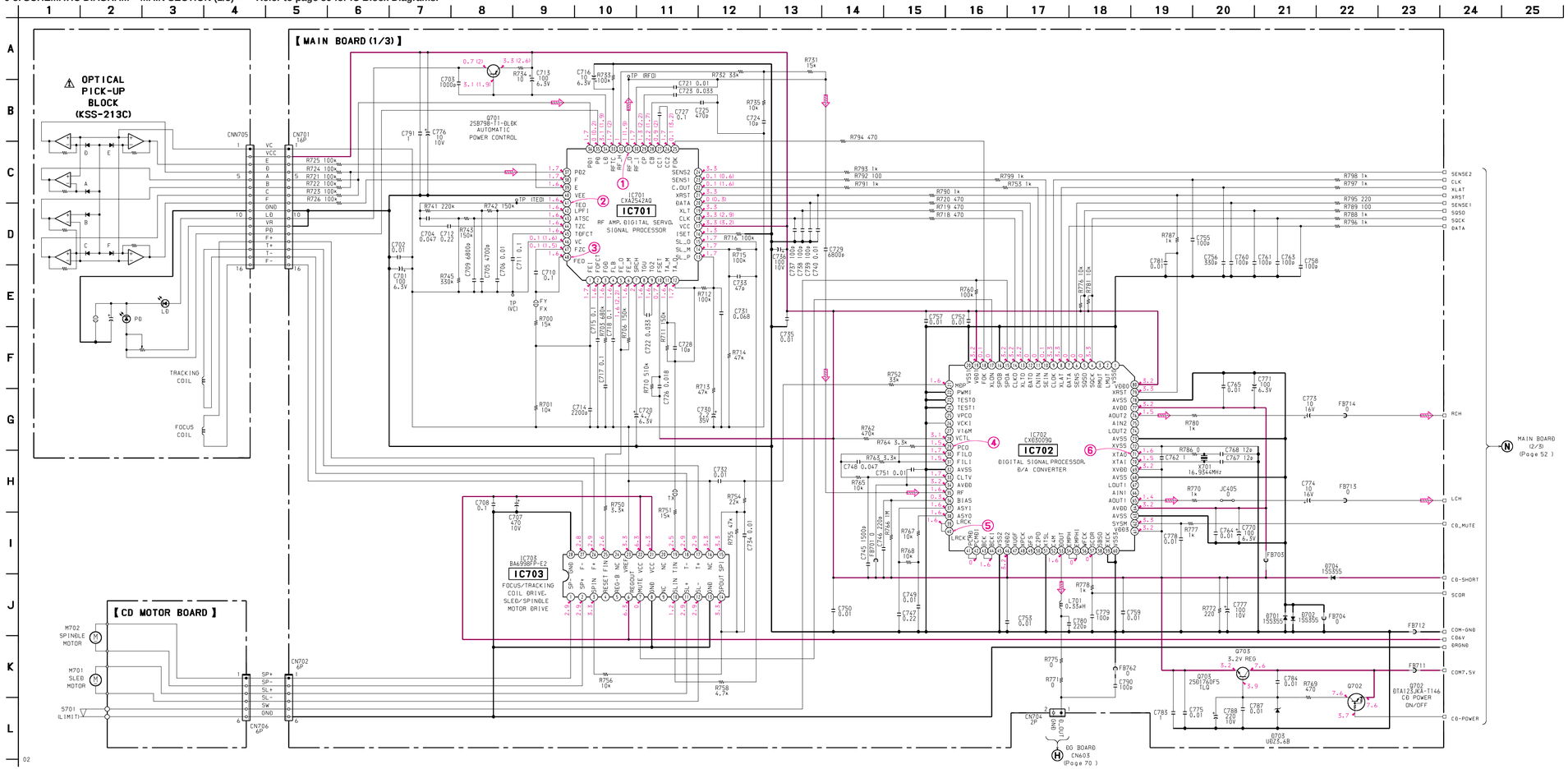
【MAIN BOARD (1/3)】
OPTICAL PICK-UP BLOCK (KSS-213C)
【CD MOTOR BOARD】
IC701 CXA2542AQ RF AMP, DIGITAL SERVO, SIGNAL PROCESSOR
IC702 CXD3029Q DIGITAL SIGNAL PROCESSOR, D/A CONVERTER
IC703 BA6598FP-E2 FOCUS/TRACKING COIL DRIVE, SLED/SPINDLE MOTOR DRIVE
Q701 2SB798-T1-DLBK AUTOMATIC POWER CONTROL
Q703 2SD1760FS 3.2V REG
Q702 DTA123JKA-T146 CD POWER ON/OFF
Q705 UDZS-6B
CN705 16P
CN701 16P
CN702 6P
CN796 6P
CN704 2P
CN603 (Page 70)
MAIN BOARD (2/3) (Page 52)
TRACKING COIL
FOCUS COIL
M702 SPINDLE MOTOR
M701 SLED MOTOR
S701 (LIMIT)
TP (RFO)
TP (TED)
TP (VC)
TP (FEO)
TP (FE)
TP (TE)
TP (SE)
TP (CE)
TP (FOK)
TP (SBAD)
TP (GFS)
TP (SCOR)
TP (SPDL)
TP (SLDL)
TP (SLDH)
TP (SPDH)
TP (SLDH)
TP (SPDH)
TP (SLDH)
TP (SPDH

6-6. SCHEMATIC DIAGRAM – MAIN SECTION (2/3) – ● Refer to page 89 for IC Block Diagrams.

● Waveforms – Main Section (2/3) –

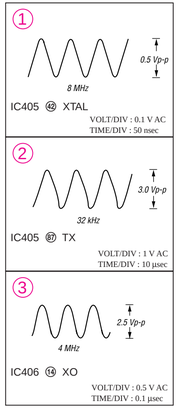

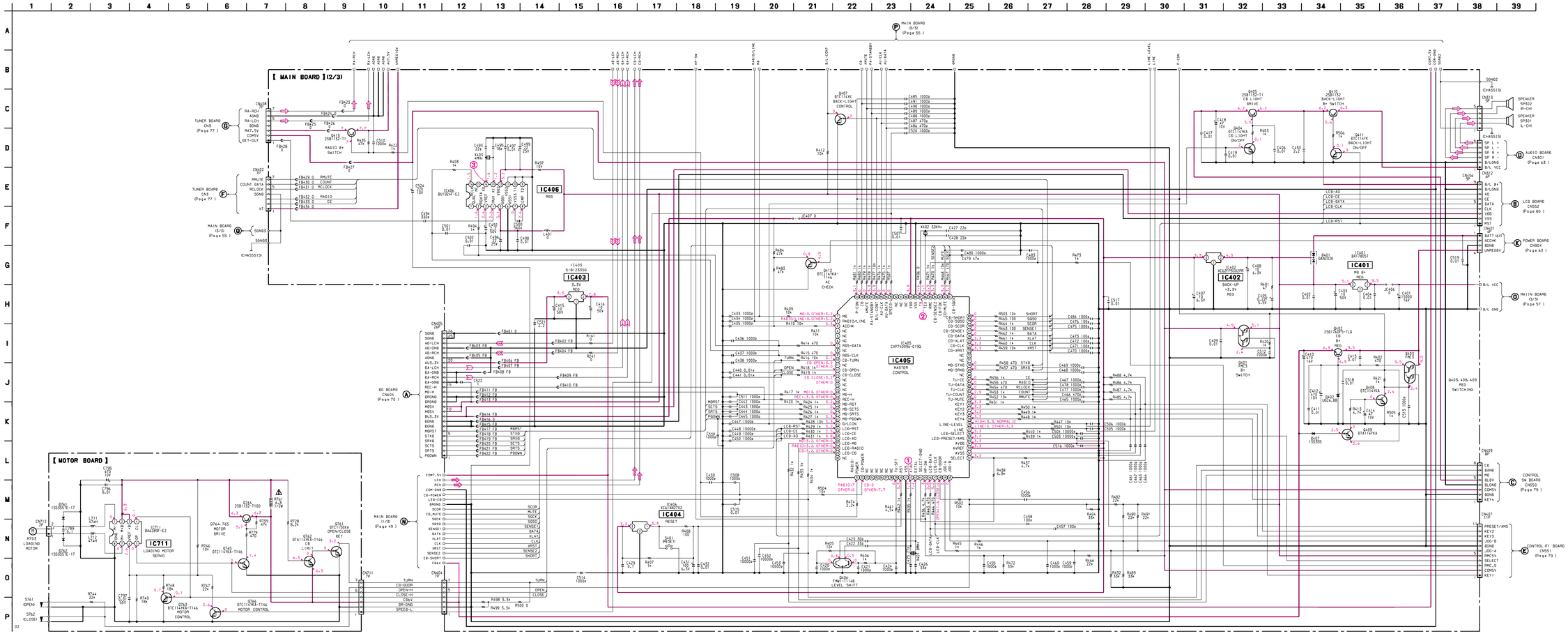

Note:
- All capacitors are in μF unless otherwise noted. pF: μμF 50 WV or less are not indicated except for electrolytics and tantalums.
- All resistors are in Ω and ¼ W or less unless otherwise specified.
- ⊣⊢ : fusible resistor.

Note: The components identified by mark ⚠ or dotted line with mark ⚠ are critical for safety. Replace only with part number specified.

- ▬▬ : B+ Line.
- Voltages and waveforms are dc with respect to ground under no-signal conditions.
  no mark : FM
- Voltages are taken with a VOM (Input impedance 10 MΩ). Voltage variations may be noted due to normal production tolerances.
- Waveforms are taken with a oscilloscope. Voltage variations may be noted due to normal production tolerances.
- Circled numbers refer to waveforms.
- Signal path.
  ⇨ : FM
  ⇨ : MD PLAY
  ⇨ : MD REC
  ⇨ : CD

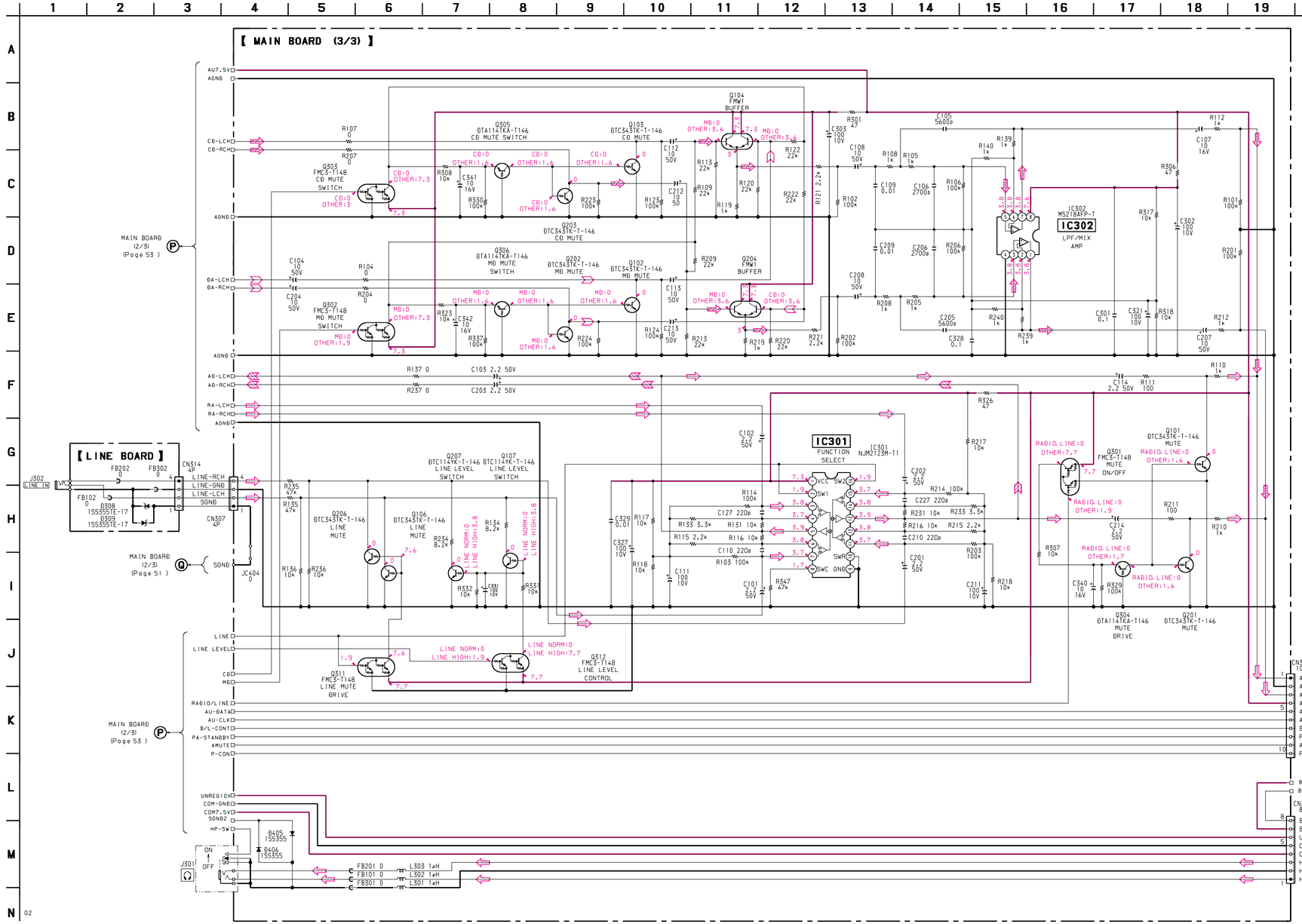

Note:

- All capacitors are in µF unless otherwise noted. pF: µµF 50 WV or less are not indicated except for electrolytics and tantalums.
- All resistors are in Ω and 1/4 W or less unless otherwise specified.
- ▬▬ : B+ Line.
- Voltages are dc with respect to ground under no-signal conditions.
  no mark : FM
- Voltages are taken with a VOM (Input impedance 10 MΩ). Voltage variations may be noted due to normal production tolerances.
- Signal path.
  ⇨ : FM
  ⇨ : MD PLAY
  ⇨ : MD REC
  ⇨ : CD

6-8. PRINTED WIRING BOARDS – AUDIO SECTION – • Refer to page 42 for Circuit Boards Location.

• **Semiconductor Location**

Ref. No.	Location
D301	I-12
D302	E-15
D303	E-14
D304	H-10
D306	G-10
D307	I-12
D901	H-2
D903	H-5
D904	H-5
D905	I-1
D906	I-2
D907	I-3
D908	I-2
IC305	E-9
IC307	I-10
IC309	H-13
IC311	H-11
IC312	H-14
Q101	I-12
Q104	H-10
Q105	G-13
Q201	I-12
Q204	H-10
Q205	G-12
Q301	G-12
Q304	F-8
Q305	H-12
Q306	D-14
Q307	G-9
Q308	G-10
Q309	G-11
Q310	H-9
Q313	G-12
Q314	E-15

Note:
• ○—— : parts extracted from the component side.
• ▒▒▒ : Pattern from the side which enables seeing.
(The other layers' patterns are not indicated.)

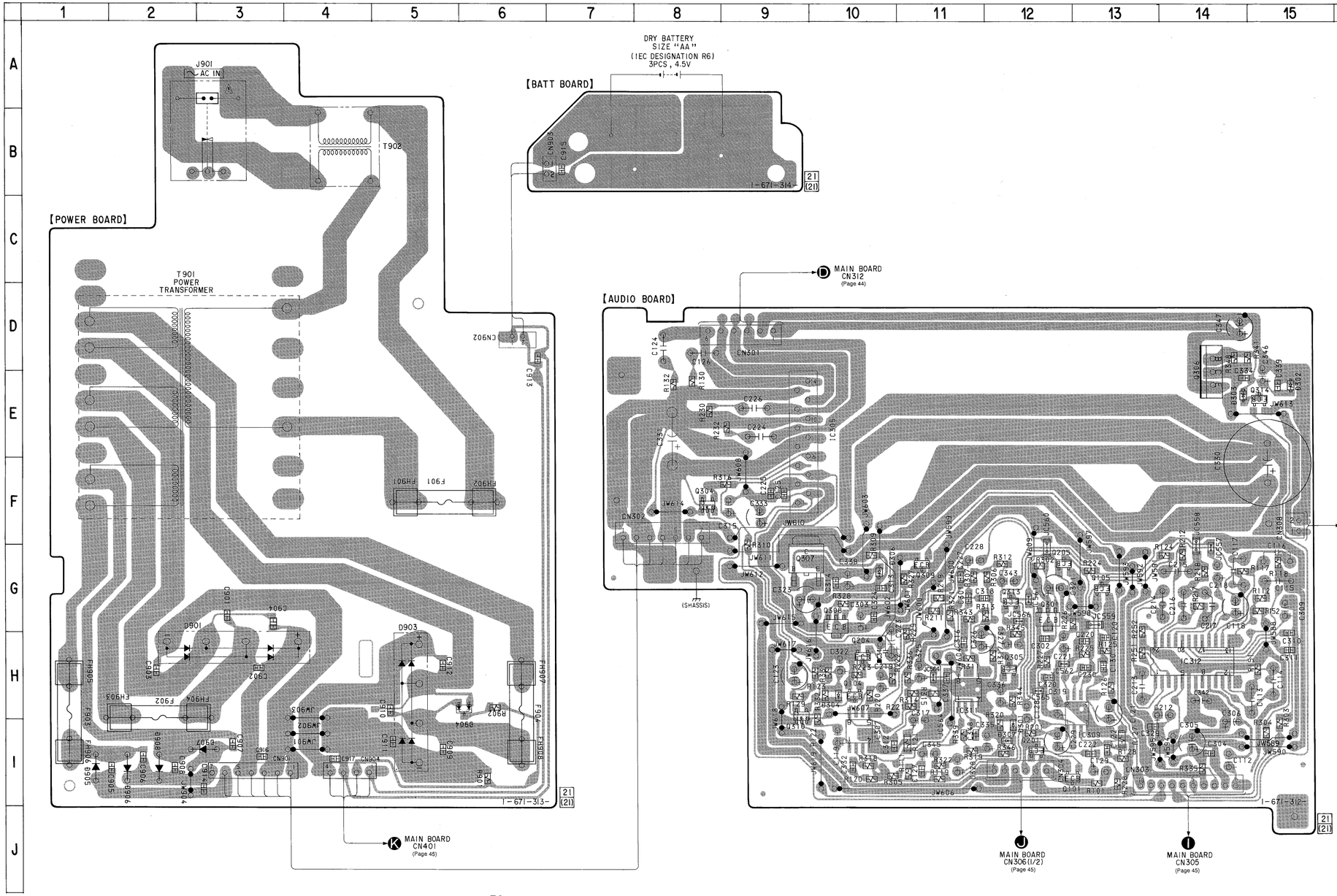

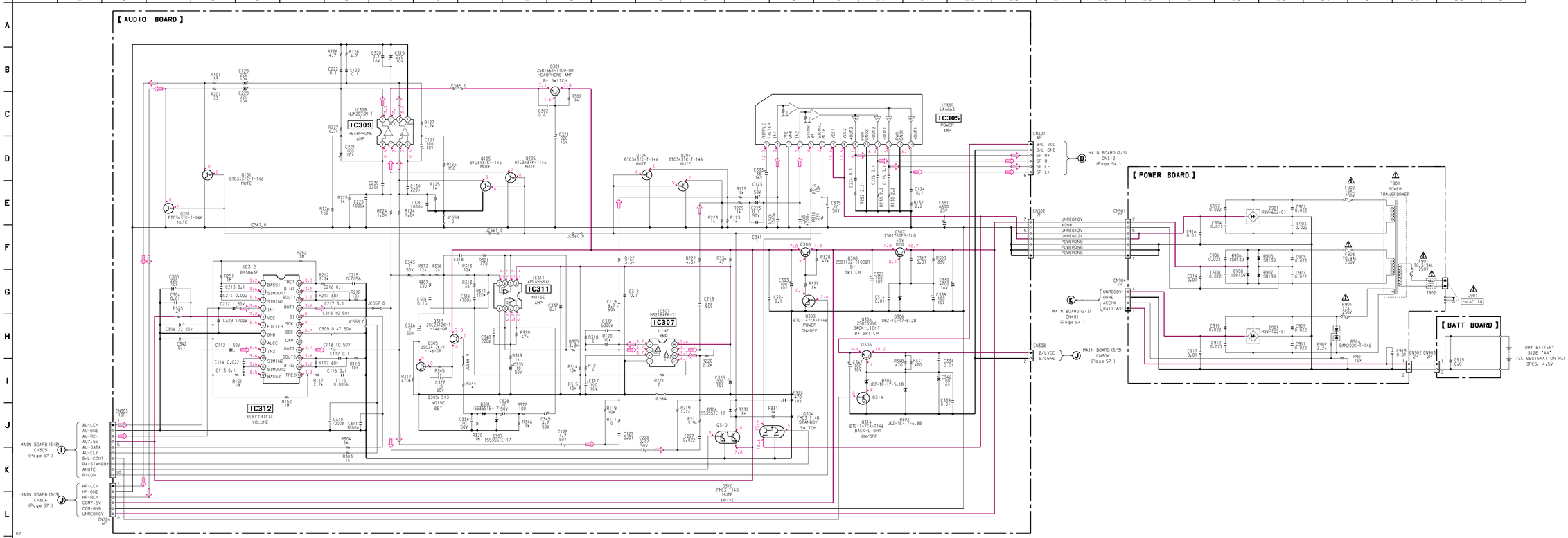

Note:

- All capacitors are in µF unless otherwise noted. pF: µµF
  50 WV or less are not indicated except for electrolytics and tantalums.
- All resistors are in Ω and 1/4 W or less unless otherwise specified.

Note: The components identified by mark ⚠ or dotted line with mark ⚠ are critical for safety.
Replace only with part number specified.

- ▬▬ : B+ Line.
- Voltages are dc with respect to ground under no-signal conditions.
  no mark : FM
- Voltages are taken with a VOM (Input impedance 10 MΩ).
  Voltage variations may be noted due to normal production tolerances.
- Signal path.
  ⇨ : FM

6-10. SCHEMATIC DIAGRAM – DG SECTION – ● Refer to page 93 for IC Block Diagram.

● Waveforms – DG Section –

① IC601 ㉗ XOUT
12 MHz, 0.63 Vp-p
VOLT/DIV : 0.2 V AC
TIME/DIV : 20 nsec

② IC601 ㉘ XOUT-T
32.768 kHz, 0.4 Vp-p
VOLT/DIV : 0.1 V AC
TIME/DIV : 10 μsec

③ IC605 ①
22.5 MHz, 0.6 Vp-p
VOLT/DIV : 0.2 V AC
TIME/DIV : 20 nsec

Note:

- All capacitors are in μF unless otherwise noted. pF: μμF 50 WV or less are not indicated except for electrolytics and tantalums.
- All resistors are in Ω and 1/4 W or less unless otherwise specified.
- △ : internal component.
- ▬▬ : B+ Line.
- Voltages and waveforms are dc with respect to ground under no-signal conditions. no mark : MD STOP
- Voltages are taken with a VOM (Input impedance 10 MΩ). Voltage variations may be noted due to normal production tolerances.
- Waveforms are taken with a oscilloscope.
- Circled numbers refer to waveforms.
- Signal path.
  ▷ : MD PLAY
  ▷ : MD REC
  ⇨ : CD

【DG BOARD】 (SIDE A)

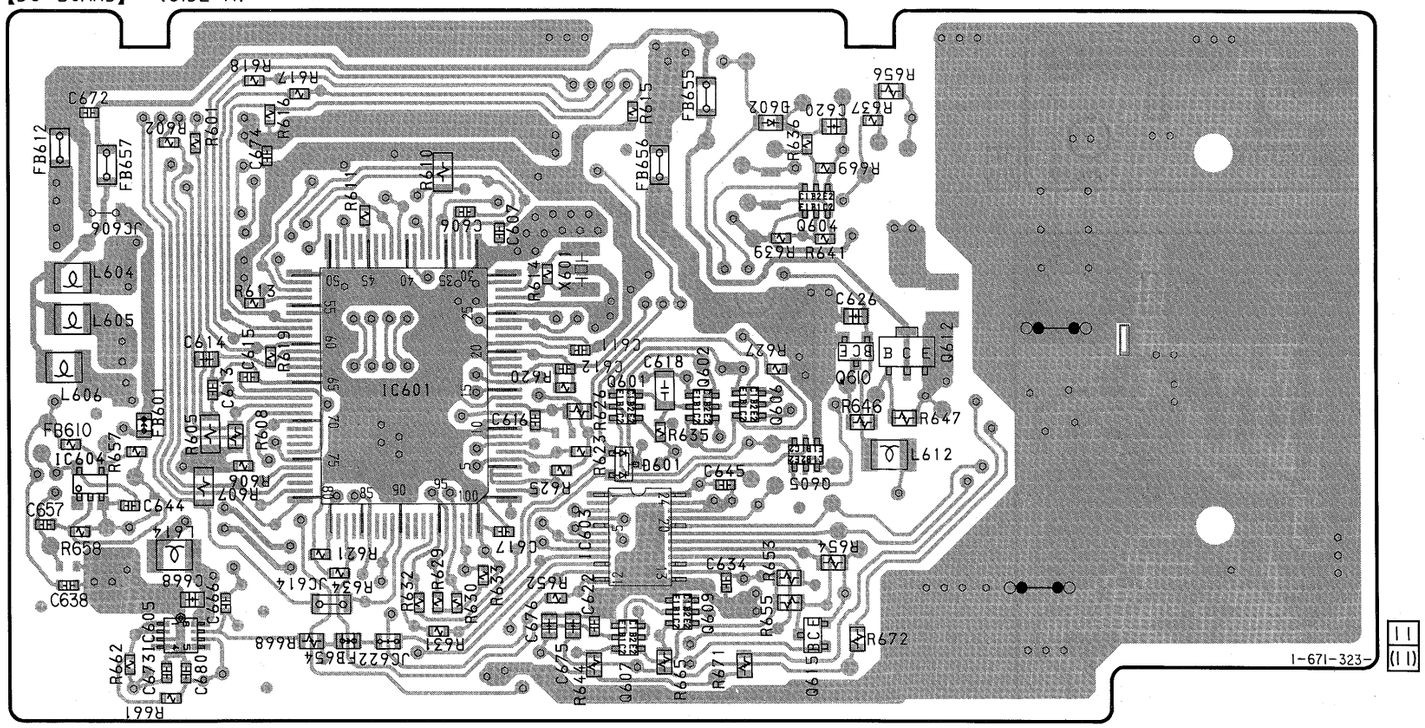

【DG BOARD】 (SIDE B)

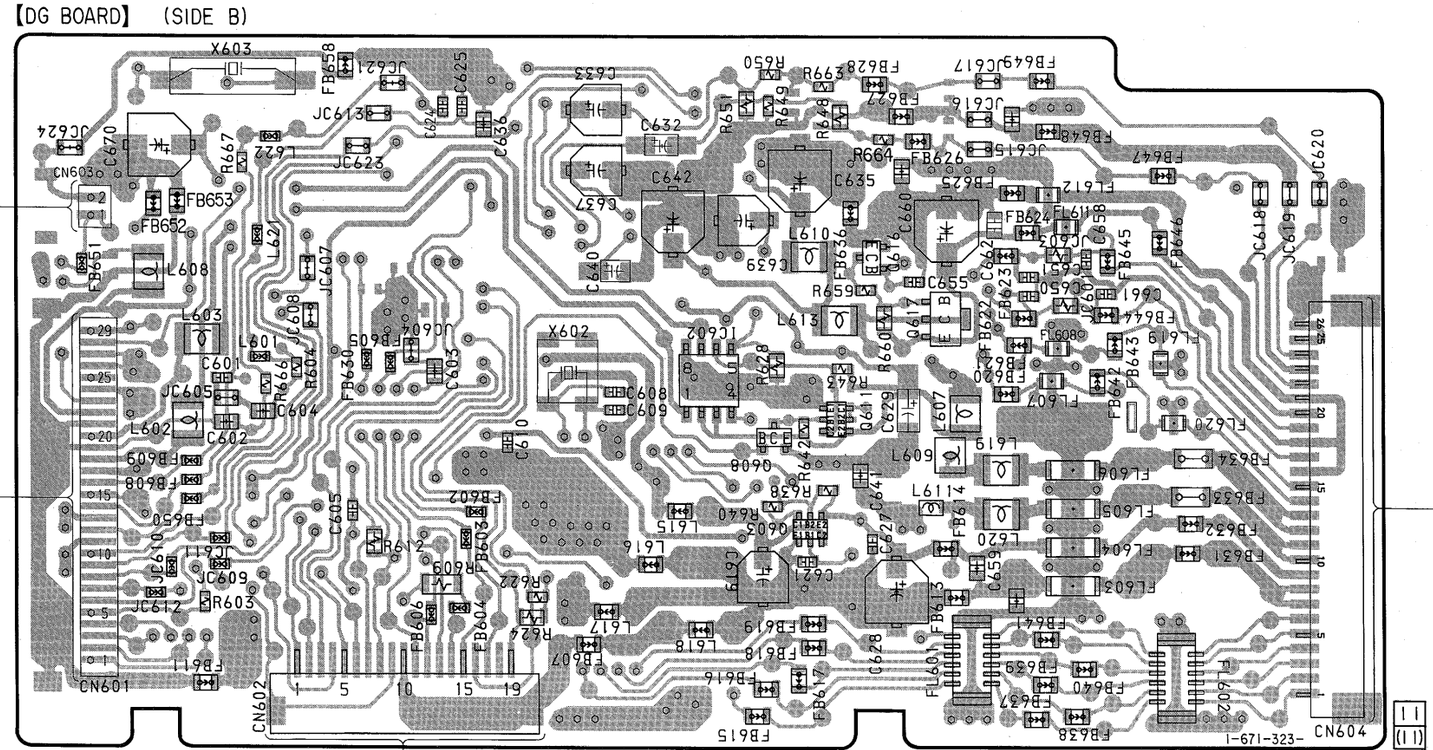

02

• **Semiconductor Location**

Ref. No.	Location
D601	C-5
D602	A-6
IC601	C-4
IC602	G-5
IC603	D-5
IC604	C-2
IC605	D-2
Q601	C-5
Q602	C-5
Q603	H-6
Q604	B-6
Q605	C-6
Q606	C-5
Q607	D-5
Q608	G-5
Q609	D-5
Q610	C-6
Q611	G-6
Q612	C-6
Q615	D-6
Q616	F-6
Q617	G-6

Note:
- ○—— : parts extracted from the component side.
- ○ : Through hole.
- ▒▒ : Pattern from the side which enables seeing.

(The other layers' patterns are not indicated.)

Caution:	
Pattern face side: (Side B)	Parts on the pattern face side seen from the pattern face are indicated.
Parts face side: (Side A)	Parts on the parts face side seen from the parts face are indicated.

6-12. PRINTED WIRING BOARDS – TUNER SECTION – ● Refer to page 42 for Circuit Boards Location.

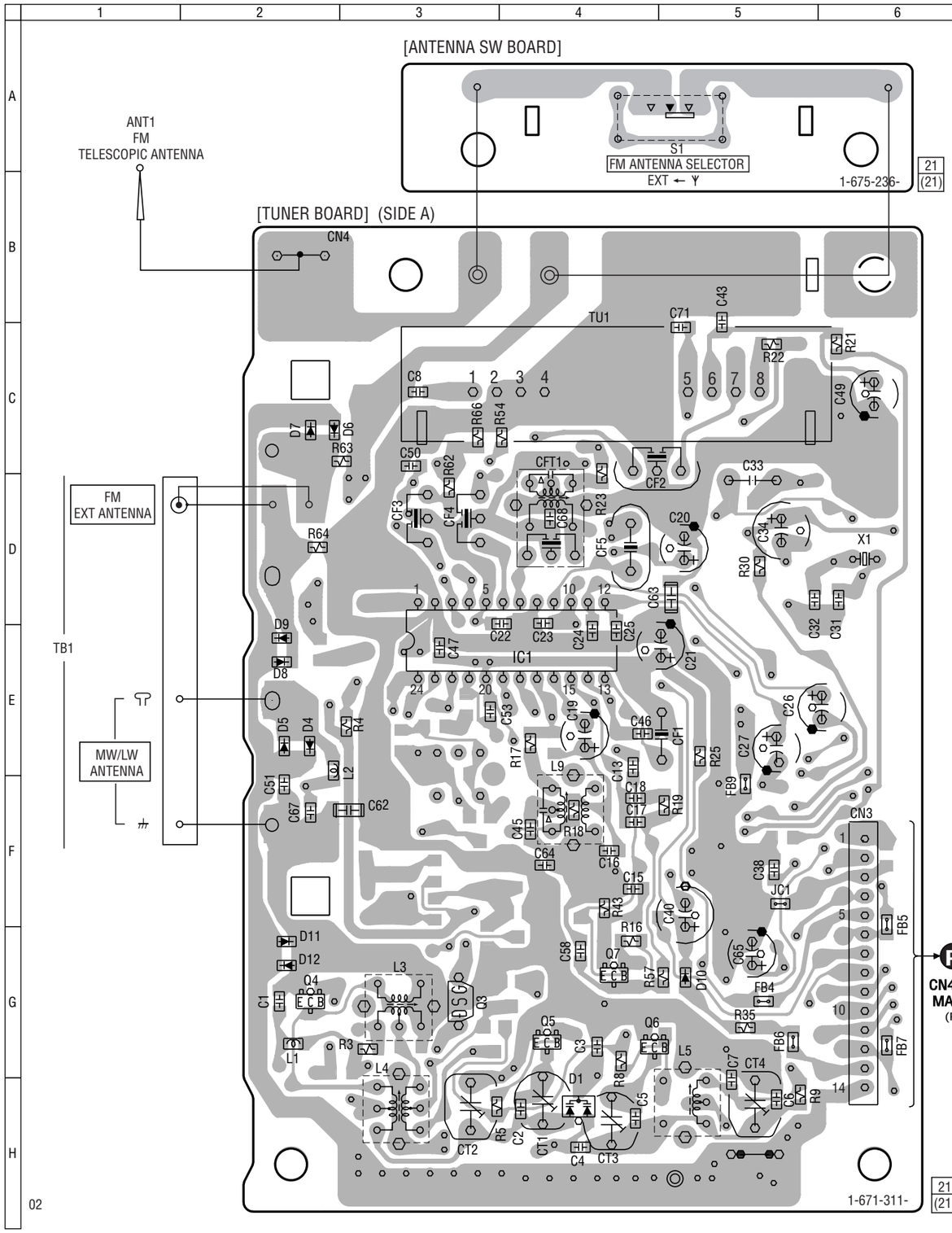

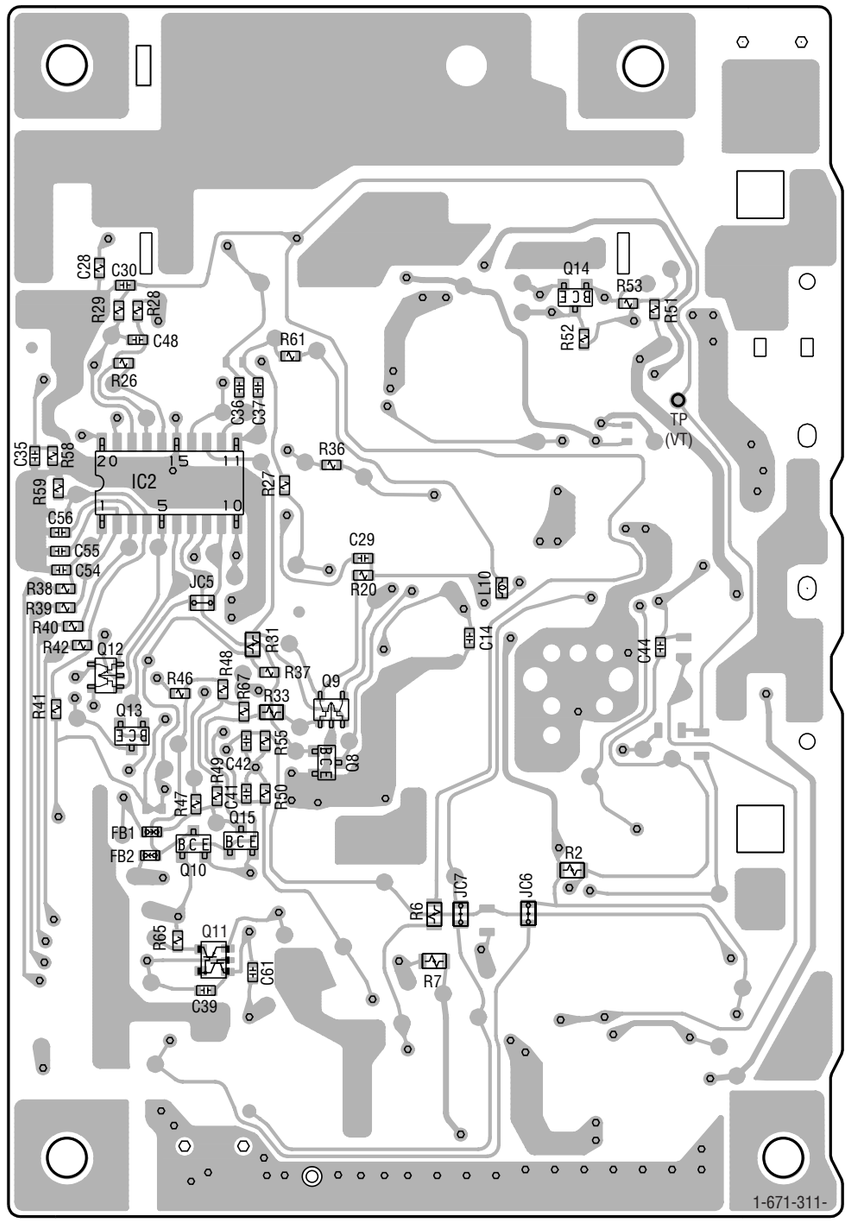

● **Semiconductor Location**

Ref. No.	Location
D1	H-4
D4	E-2
D5	E-2
D6	C-2
D7	C-2
D8	E-2
D9	E-2
D10	G-5
D11	G-2
D12	G-2
IC1	E-4
IC2	D-8
Q3	G-3
Q4	G-2
Q5	G-4
Q6	G-4
Q7	G-4
Q8	F-9
Q9	F-9
Q10	F-8
Q11	G-8
Q12	E-8
Q13	F-8
Q14	C-10
Q15	F-8

Note:
- ○——— : parts extracted from the component side.
- ○ : Through hole.
- ▒▒▒ : Pattern from the side which enables seeing.

(The other layers' patterns are not indicated.)

Caution:	
Pattern face side: (Side B)	Parts on the pattern face side seen from the pattern face are indicated.
Parts face side: (Side A)	Parts on the parts face side seen from the parts face are indicated.

6-13. SCHEMATIC DIAGRAM – TUNER SECTION – ● Refer to page 94 for IC Block Diagrams.

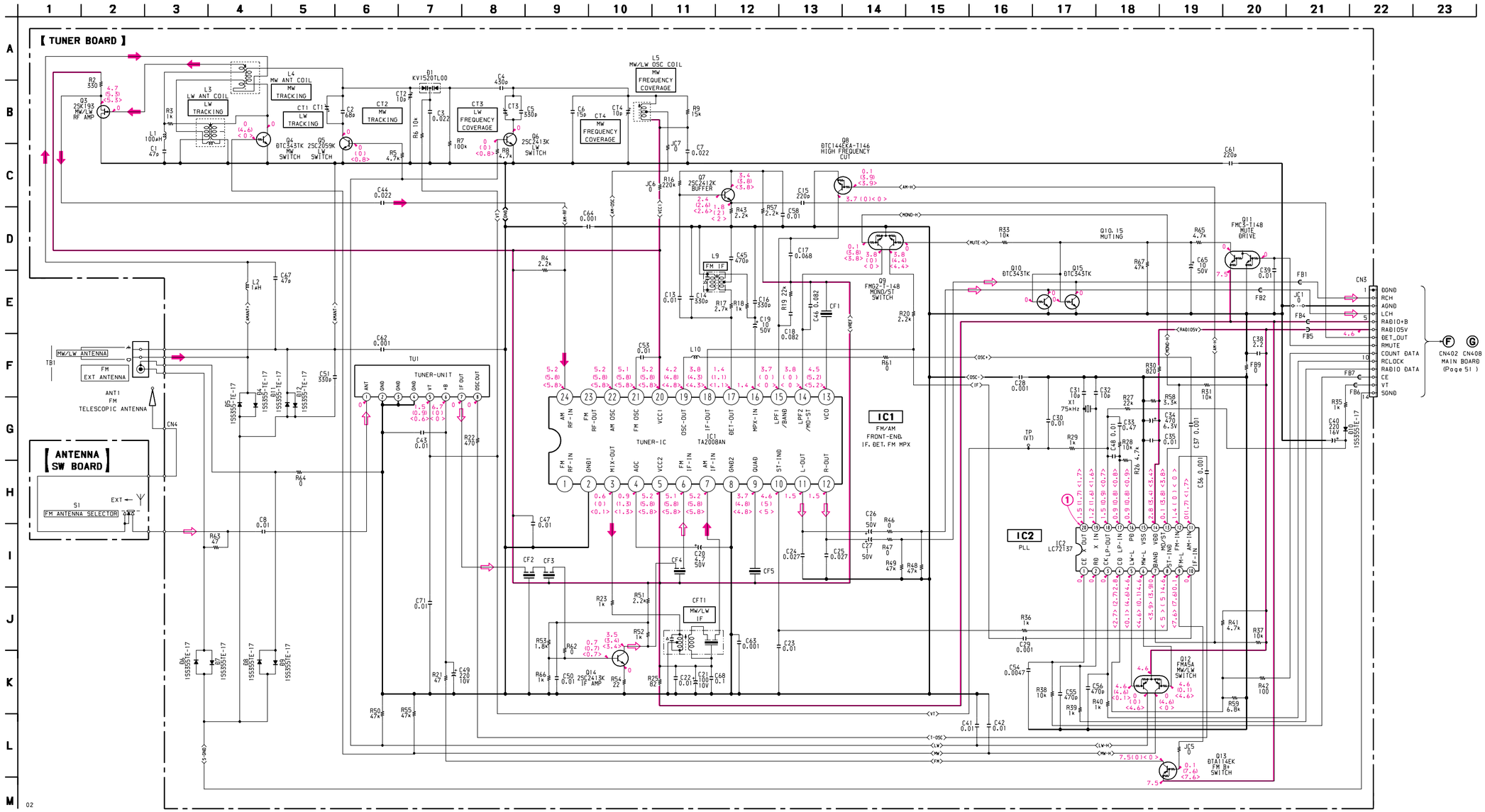

● **Waveform – Tuner Section –**

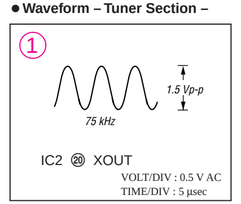

Note:

- All capacitors are in µF unless otherwise noted. pF: µµF 50 WV or less are not indicated except for electrolytics and tantalums.
- All resistors are in Ω and 1/4 W or less unless otherwise specified.
- △ : internal component.
- ▬▬ : B+ Line.
- ▭ : adjustment for repair.
- Voltages and waveforms are dc with respect to ground under no-signal (detuned) conditions.
  no mark : FM
  ( ) : MW
  < > : LW
- Voltages are taken with a VOM (Input impedance 10 MΩ). Voltage variations may be noted due to normal production tolerances.
- Waveforms are taken with a oscilloscope.
- Circled numbers refer to waveforms.
- Signal path.
  ⇨ : FM
  ➡ : MW/LW

6-14. SCHEMATIC DIAGRAM – CONTROL SECTION –

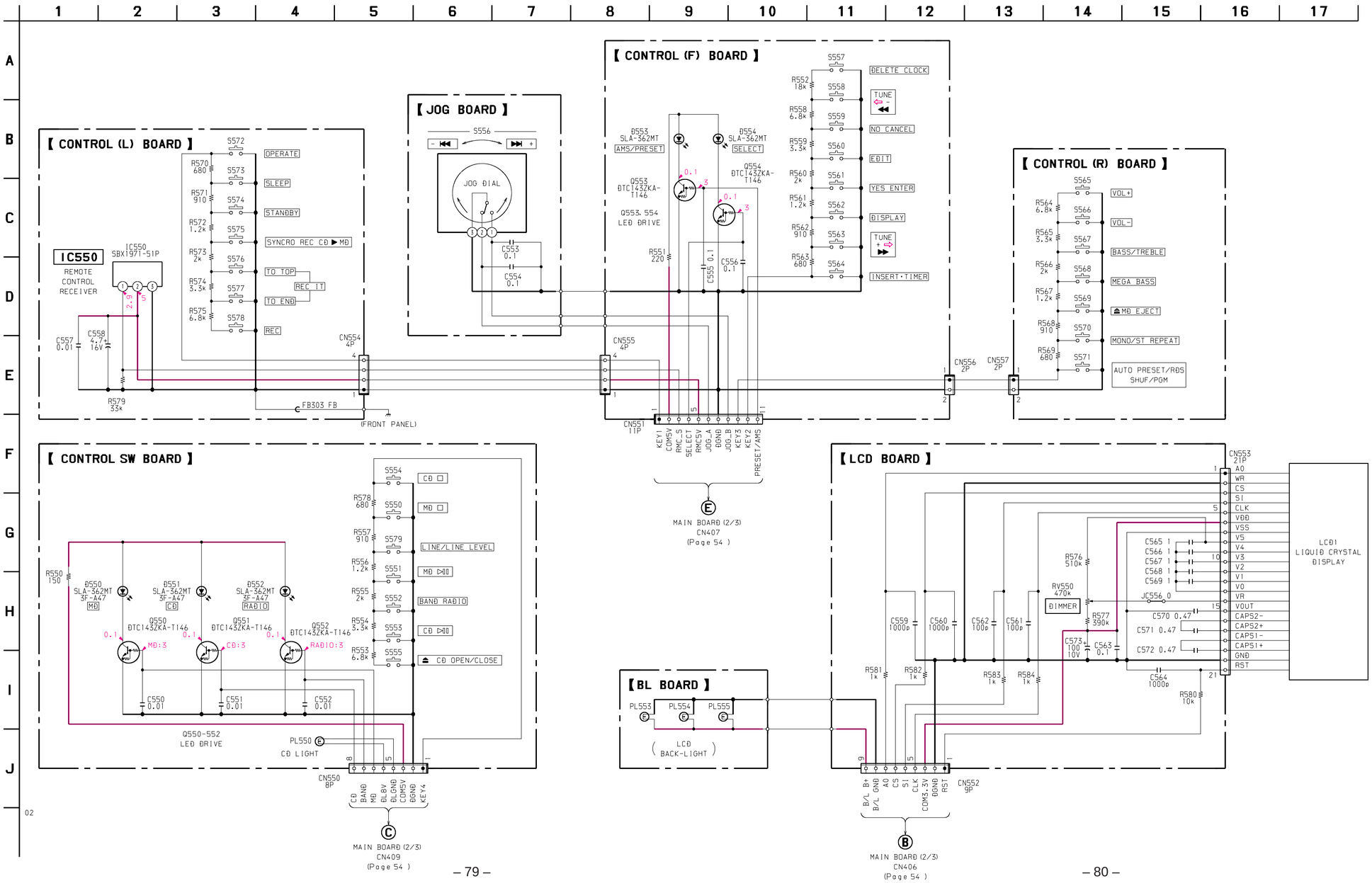

Note:

- All capacitors are in µF unless otherwise noted. pF: µµF 50 WV or less are not indicated except for electrolytics and tantalums.
- All resistors are in Ω and ¼ W or less unless otherwise specified.
- ▬ : B+ Line.
- ▭ : adjustment for repair.
- Voltages are dc with respect to ground under no-signal conditions.
  no mark : FM
- Voltages are taken with a VOM (Input impedance 10 MΩ). Voltage variations may be noted due to normal production tolerances.

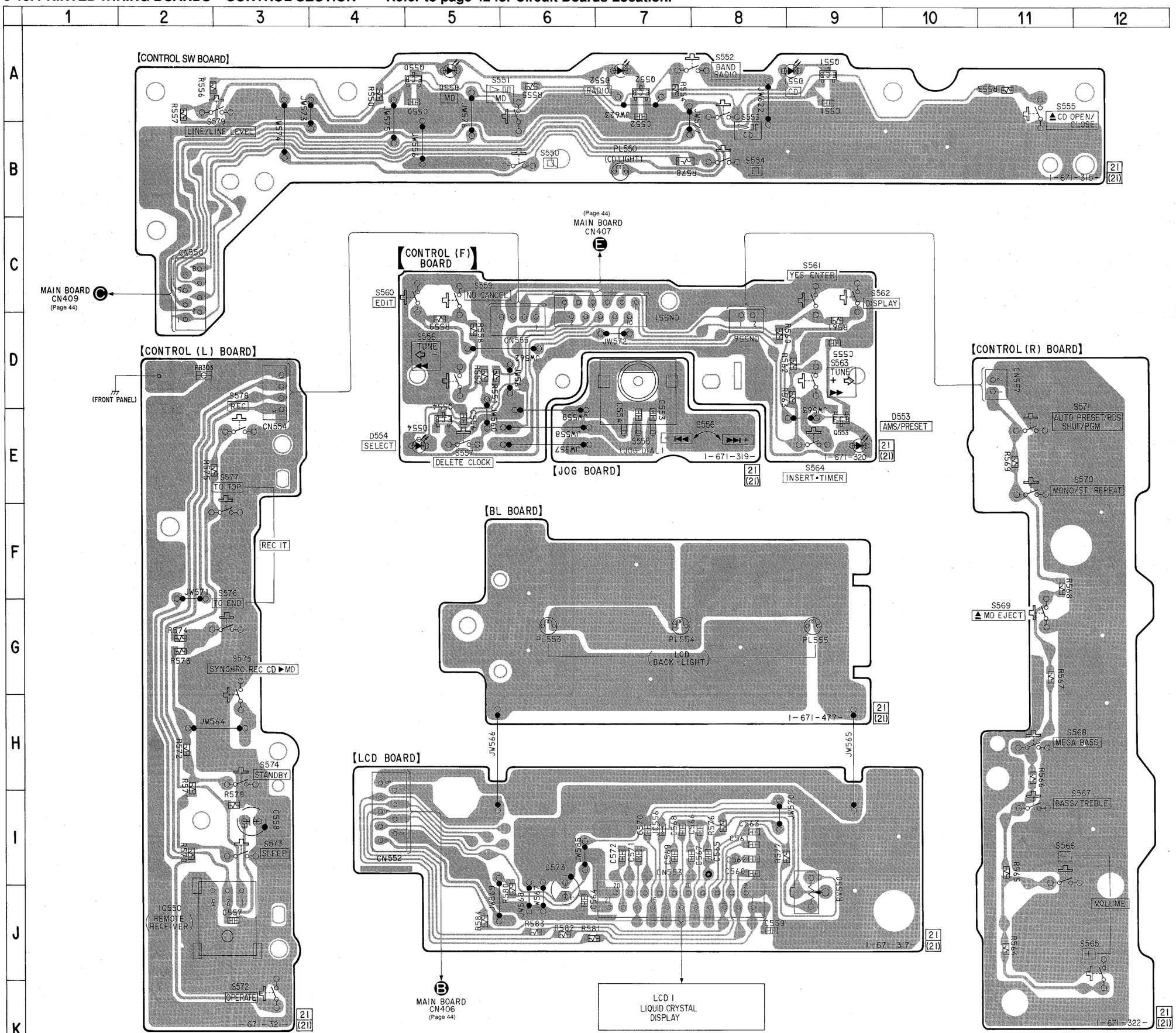

- **Semiconductor Location**

Ref. No.	Location
D550	A-5
D551	A-9
D552	A-7
D553	E-9
D554	E-5
IC550	J-3
Q550	A-5
Q551	A-9
Q552	A-7
Q553	E-9
Q554	E-5

Note:
- ○—— : parts extracted from the component side.
- ▒▒▒ : Pattern from the side which enables seeing.

(The other layers' patterns are not indicated.)

5-16. PRINTED WIRING BOARDS – BD SECTION – • Refer to page 42 for Circuit Boards Location.

【BD BOARD】 (SIDE A)

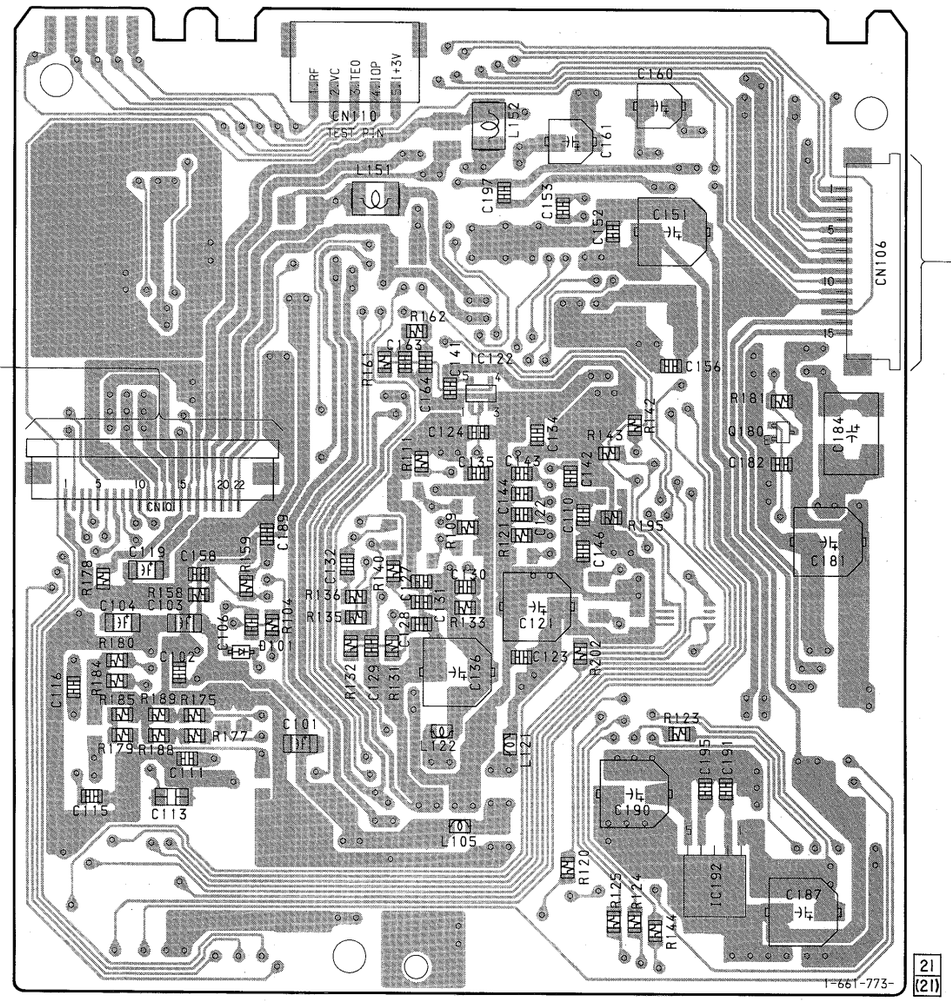

【BD BOARD】 (SIDE B)

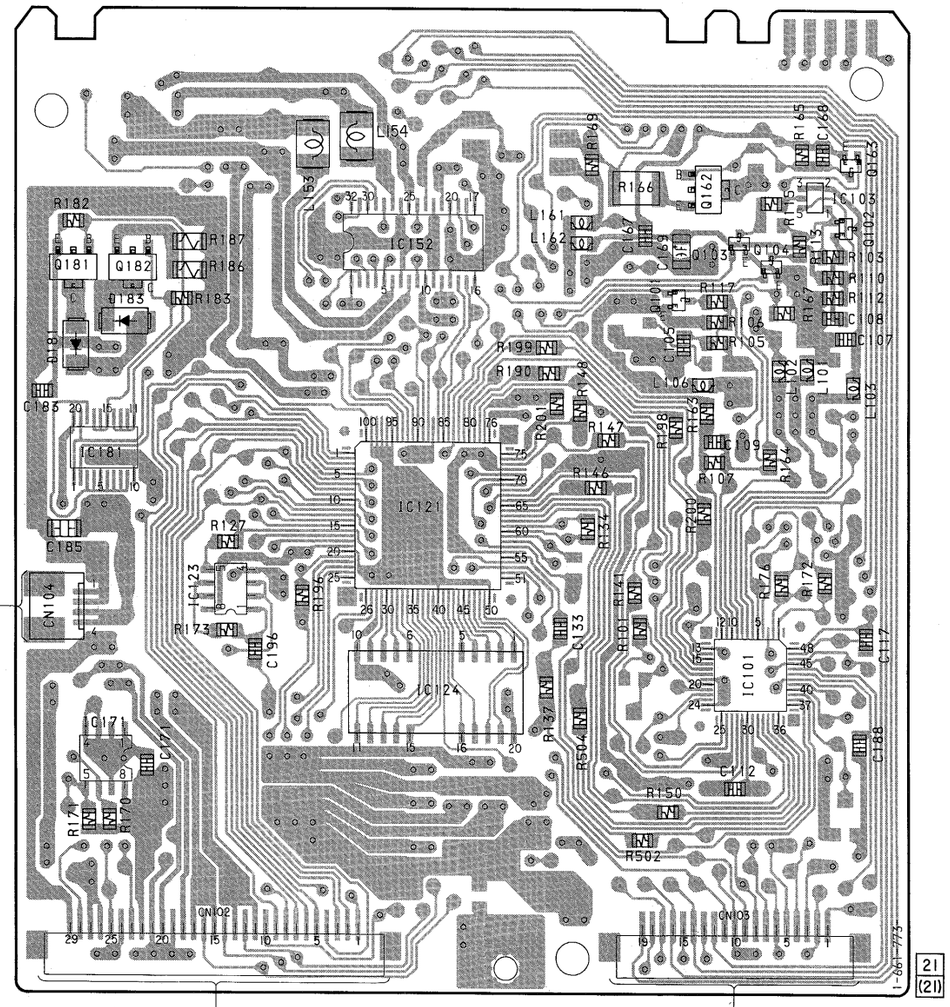

OPTICAL PICK-UP BLOCK
(KMS-260A)

HR901
OVER WRITE HEAD

DG BOARD
CN601
(Page 71)

DG BOARD
CN602
(Page 71)

【SW BOARD】 (SIDE A)

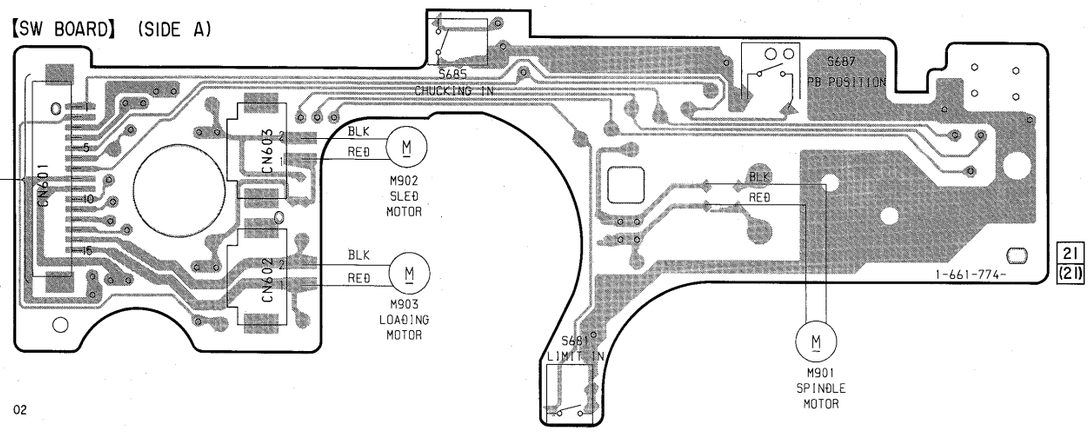

【SW BOARD】 (SIDE B)

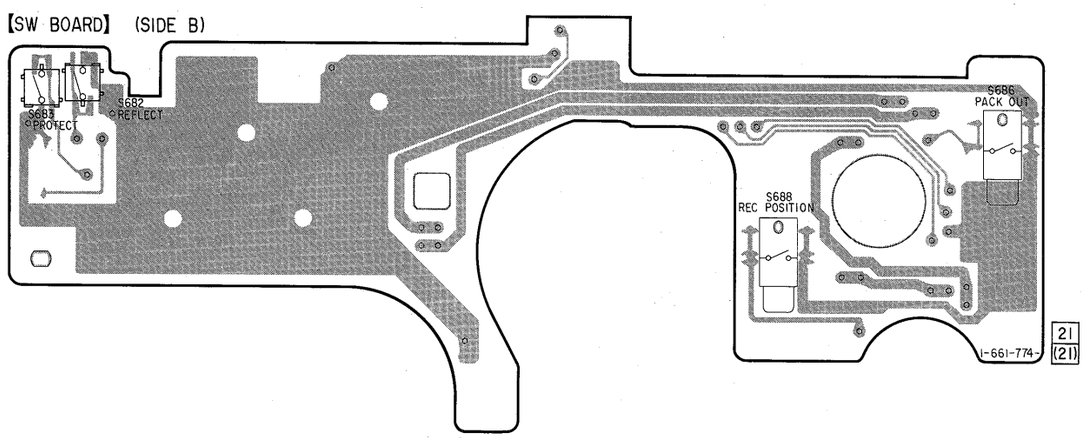

● **Semiconductor Location**

Ref. No.	Location
D101	E-4
D181	C-9
D183	C-9
IC101	E-13
IC103	B-13
IC121	D-11
IC122	C-5
IC123	D-10
IC124	E-11
IC152	B-11
IC171	E-9
IC181	D-9
IC192	F-7
Q101	C-13
Q102	B-14
Q103	B-13
Q104	B-13
Q162	B-13
Q163	B-14
Q180	C-7
Q181	C-9
Q182	C-9

Note on Printed Wiring Boards:

Note:

- ○——○ : parts extracted from the component side.
- ○ : Through hole.
- ▒▒▒▒ : Pattern from the side which enables seeing.

(The other layers' patterns are not indicated.)

Caution:
Pattern face side: (Side B) Parts on the pattern face side seen from the pattern face are indicated.
Parts face side: (Side A) Parts on the parts face side seen from the parts face are indicated.

Note on Schematic Diagram:

Note:

- All capacitors are in µF unless otherwise noted. pF: µµF 50 WV or less are not indicated except for electrolytics and tantalums.
- All resistors are in Ω and 1/4 W or less unless otherwise specified.
- % : indicates tolerance.

Note: The components identified by mark ⚠ or dotted line with mark ⚠ are critical for safety.
Replace only with part number specified.

- ▬▬ : B+ Line.
- Voltages and waveforms are dc with respect to ground under no-signal conditions.
  no mark : MD STOP
  ( ) : MD PLAY
  < > : MD REC
  ✻ : Impossible to measure
- Voltages are taken with a VOM (Input impedance 10 MΩ). Voltage variations may be noted due to normal production tolerances.
- Waveforms are taken with a oscilloscope.
- Circled numbers refer to waveforms.
- Signal path.
  ▷ : MD PLAY
  ▷▷ : MD REC
  ⇨ : CD

● **Waveforms – BD Section –**

① PLAY MODE
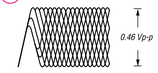

IC101 ①, ② I, J
VOLT/DIV : 0.2 V AC
TIME/DIV : 0.5 µsec

② PLAY MODE

IC101 ㉘ RF
VOLT/DIV : 0.5 V AC
TIME/DIV : 0.5 µsec

③ PLAY MODE

IC101 ④ A
VOLT/DIV : 20 mV AC
TIME/DIV : 1 µsec

④ PLAY MODE

IC101 ⑧, ⑨ E, F
VOLT/DIV : 20 mV AC
TIME/DIV : 1 µsec

⑤
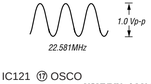

IC121 ⑰ OSCO
VOLT/DIV : 0.2 V AC
TIME/DIV : 50 nsec

⑥
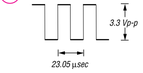

IC121 ㉓ LRCK
VOLT/DIV : 1 V AC
TIME/DIV : 10 µsec

⑦
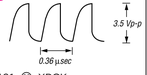

IC121 ㉖ XBCK
VOLT/DIV : 1 V AC
TIME/DIV : 0.1 µsec

⑧
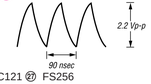

IC121 ㉗ FS256
VOLT/DIV : 0.5 V AC
TIME/DIV : 50 nsec

⑨
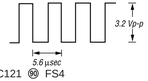

IC121 ㉔ FS4
VOLT/DIV : 1 V AC
TIME/DIV : 2 µsec

● IC Block Diagrams – Main Section –

IC701 CXA2542AQ

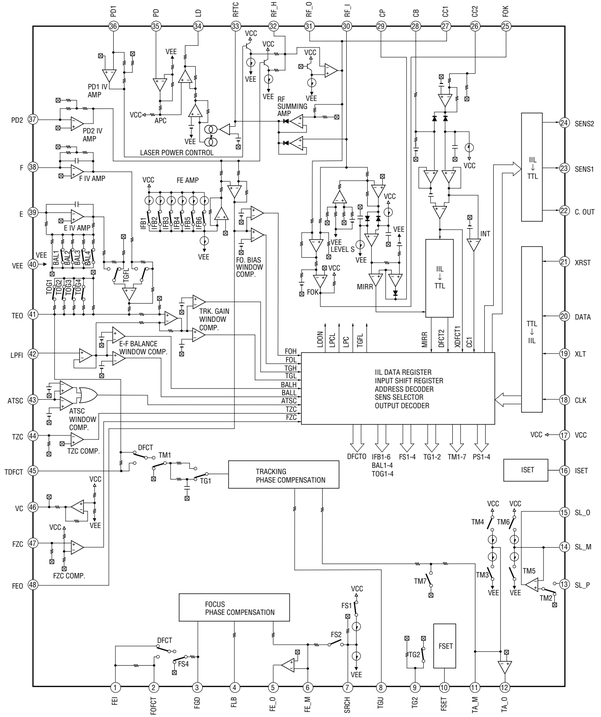
PD1 IV AMP
PD2 IV AMP
LASER POWER CONTROL
RF SUMMING AMP
F I/V AMP
E I/V AMP
FE AMP
FO. BIAS WINDOW COMP.
TRK. GAIN WINDOW COMP.
E-F BALANCE WINDOW COMP.
ATSC WINDOW COMP.
TZC COMP.
FZC COMP.
TRACKING PHASE COMPENSATION
FOCUS PHASE COMPENSATION
IIL TTL
IIL DATA REGISTER
INPUT SHIFT REGISTER
ADDRESS DECODER
SENS SELECTOR
OUTPUT DECODER
PD1 PD2 PD3 PD4 PD5 PD6 PD7 PD8
PDO1 PDO2 PDO3 PDO4 PDO5 PDO6 PDO7 PDO8
SENS2 SENS1 C. OUT XRST DATA XLT CLK VCC ISET SL_O SL_M SL_P
PD2 F E VEE TEO LPFI ATSC TZC TDFCT VC FZC FEO
FE1 FDFCT FSO FLB FE_O FE_M SRCH TBAL TG2 FSET TA_M TA_O

IC702 CXD3009Q

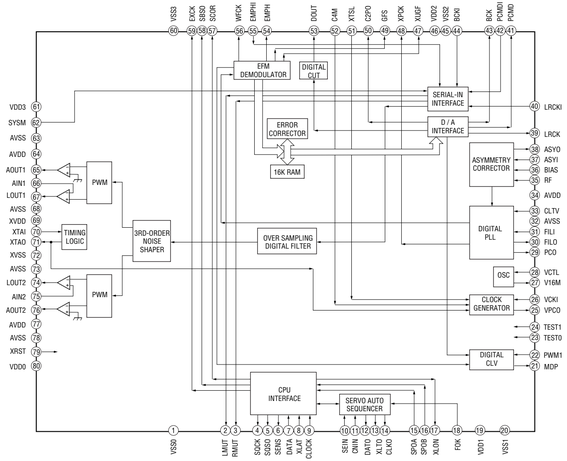
EFM DEMODULATOR
DIGITAL CUT
ERROR CORRECTOR
16K RAM
SERIAL-IN INTERFACE
D / A INTERFACE
ASYMMETRY CORRECTOR
DIGITAL PLL
OSC
CLOCK GENERATOR
DIGITAL CLV
PWM
TIMING LOGIC
3RD-ORDER NOISE SHAPER
OVER SAMPLING DIGITAL FILTER
CPU INTERFACE
SERVO AUTO SEQUENCER
LRCKI LRCK ASYO ASYI BIAS RF CLTV AVSS FILI FILO PCO VCTL V16M VCKI VPCO TEST1 TEST0 PWM1 MDP
VDD3 SYSM AVSS AVDD AOUT1 AIN1 LOUT1 AVSS XVDD XTAI XTAO XVSS AVSS LOUT2 AIN2 AOUT2 AVDD AVSS XRST VDD0
VSS0 LAUT RAUT SDCK SDSO SENS XLAT SCLK SCOR WFCK EMPHI EMPH DOUT C4M XTSL C2PO GFS XPCK XUGF VDD2 VSS2 BCK PCMDI LVDD

IC703 BA6898FP-E2

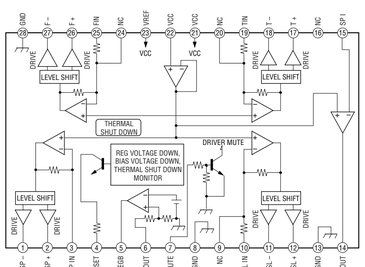
LEVEL SHIFT
DRIVE
THERMAL SHUT DOWN
REG VOLTAGE DOWN, BIAS VOLTAGE DOWN, THERMAL SHUT DOWN MONITOR
DRIVER MUTE
VCC
SP- SP+ SP IN RESET REGO REGOUT MUTE GND NC SL IN SL- SL+ GND SPOUT

● IC Block Diagrams – BD Section –

IC101 CXD2523R

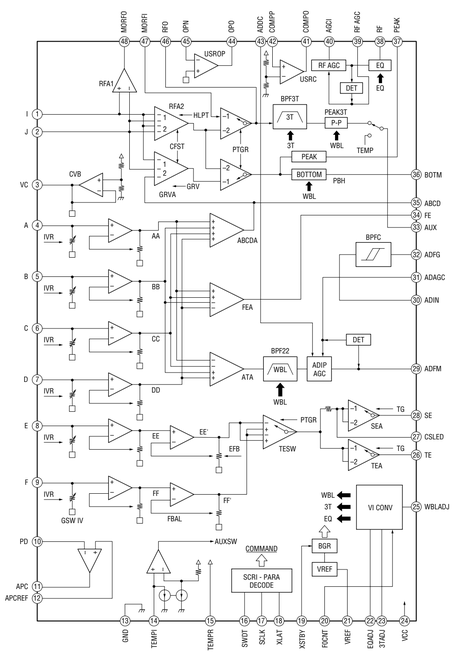

IC121 CXD2652AR

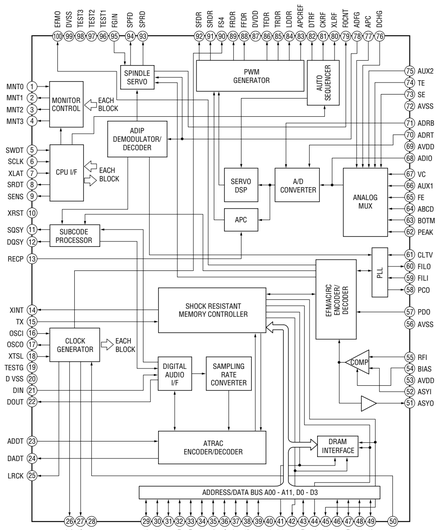
SPINDLE SERVO
PWM GENERATOR
AUTO SEQUENCER
MONITOR CONTROL
EACH BLOCK
ADIP DEMODULATOR/ DECODER
CPU I/F
SERVO DSP
A/D CONVERTER
ANALOG MUX
APC
SUBCODE PROCESSOR
PLL
SHOCK RESISTANT MEMORY CONTROLLER
CLOCK GENERATOR
DIGITAL AUDIO I/F
SAMPLING RATE CONVERTER
ATRAC ENCODER/DECODER
DRAM INTERFACE
ADDRESS/DATA BUS A00 - A11, D0 - D3
MNT0 MNT1 MNT2 MNT3 SWDT SCLK XLAT SRDT SENS XRST SQSY DQSY RECP XINT TX OSCI OSCO XTSL TEST0 D VSS DIN DOUT ADDT DADT LRCK
ALPO ALPI VC AUX1 FE ABCD BOTM PEAK CLTV FILO FILI PCO PDO AVSS RFI BIAS AVDD ASYI ASYO
XBOO XRAS XCAS A00 A01 A02 A03 A04 A05 A06 A07 A08 A09 A10 A11 D0 D1 D2 D3 M/VD

IC152 BH6511FS

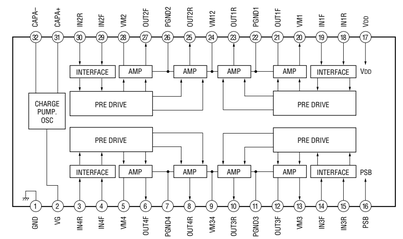
INTERFACE
AMP
CHARGE PUMP OSC
PRE DRIVE
CAPA- CAPA+ IN2R IN2F VM2 OUT2F PGND2 OUT2R VM12 OUT1R PGND1 OUT1F VM1 IN1F IN1R Vcc
GND VG IM4R IM4F VM4 OUT4F PGND4 OUT4R VM34 OUT3R PGND3 OUT3F VM3 IN3F IN3R PSB

● **IC Block Diagram – Audio Section –**

IC312 BH3863F-E2

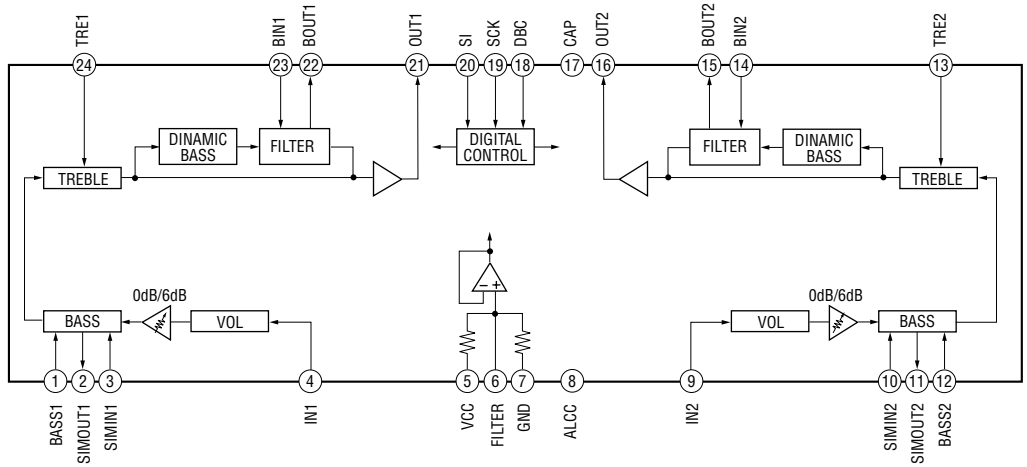

● **IC Block Diagram – DG Section –**

IC603 PCM3003E/T2

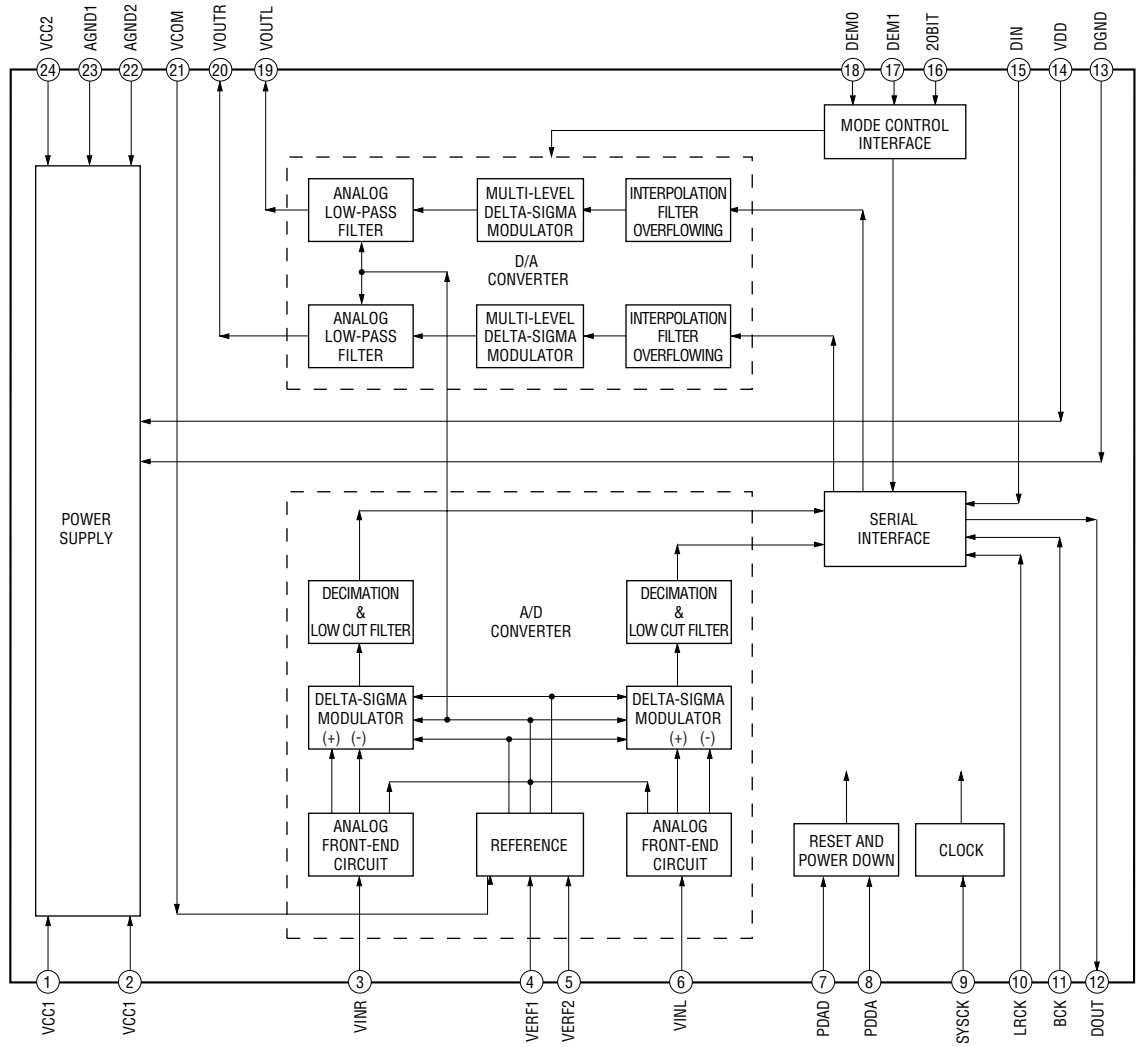

- **IC Block Diagrams – Tuner Section –**

IC1 TA2008AN

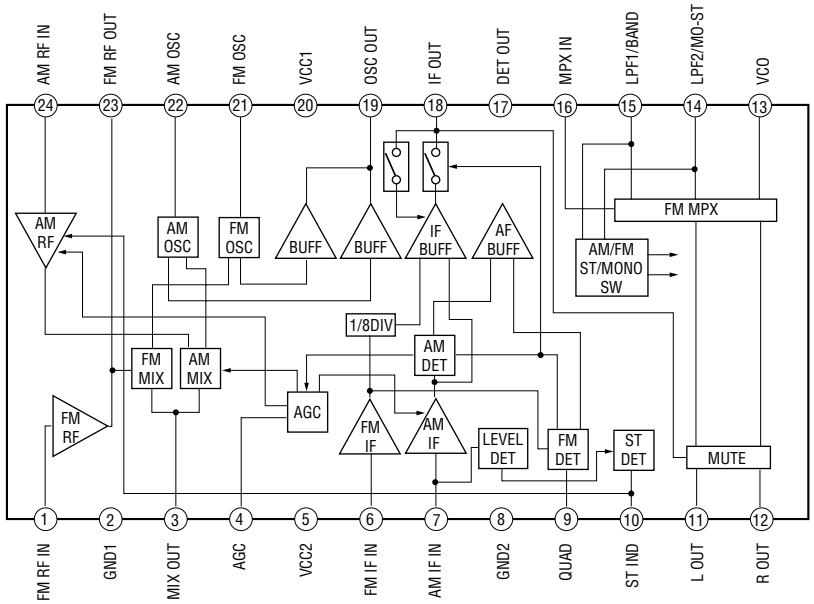

IC2 LC72137M-TLM

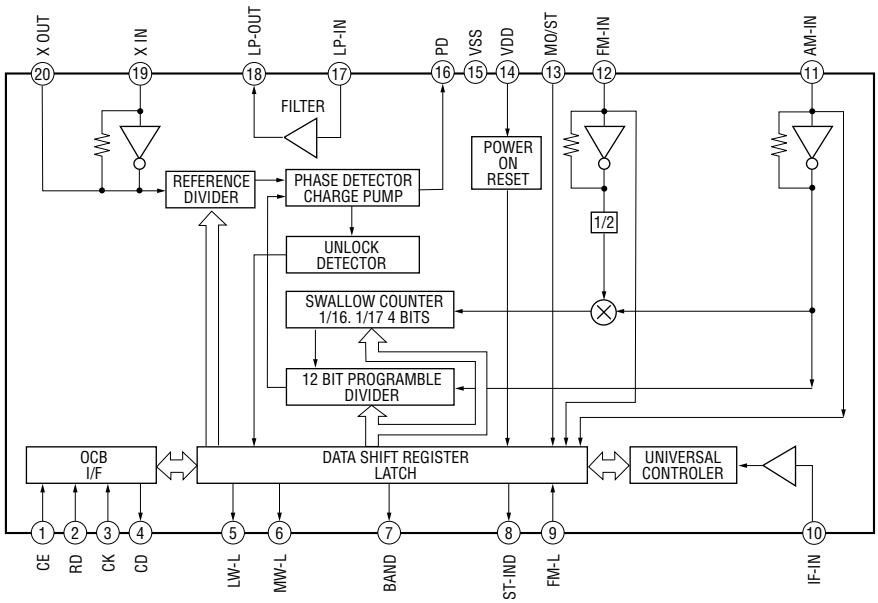

SECTION 7
EXPLODED VIEWS

NOTE :

- -XX, -X mean standardized parts, so they may have some difference from the original one.
- Color indication of Appearance Parts
  Example :
  KNOB, BALANCE (WHITE) ••• (RED)
  ↑ ↑
  Parts color Cabinet's color
- Items marked " * "are not stocked since they are seldom required for routine service. Some delay should be anticipated when ordering these items.
- The mechanical parts with no reference number in the exploded views are not supplied.
- Hardware (# mark) list and accessories and packing materials are given in the last of this parts list.

The components identified by mark ⚠ or dotted line with mark ⚠ are critical for safety.
Replace only with part number specified.

7-1. REAR CABINET SECTION

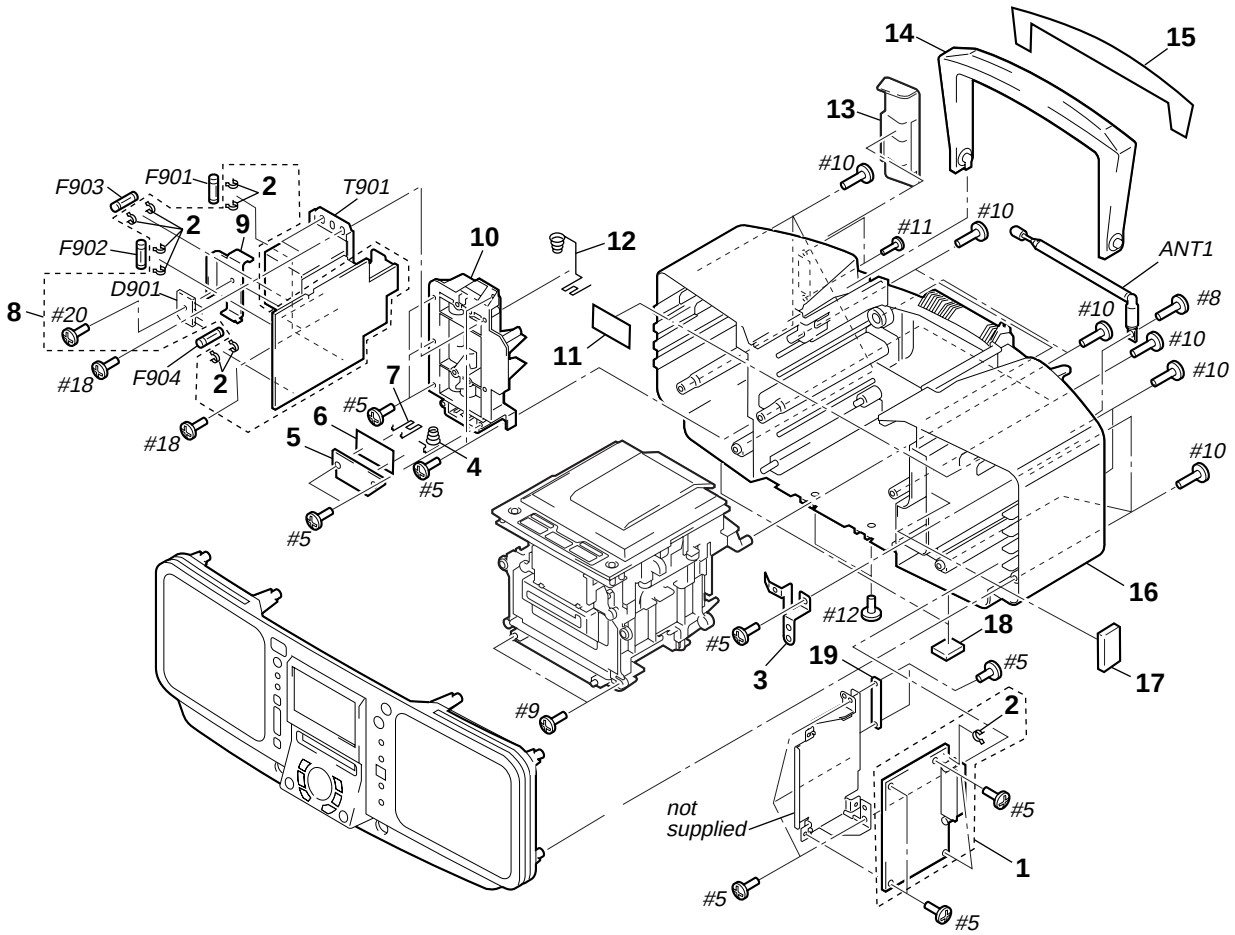

Ref. No.	Part No.	Description	Remark
* 1	A-3323-154-A	TUNER BOARD, COMPLETE	
2	1-533-217-31	HOLDER, FUSE	
3	3-027-686-01	TERMINAL BOARD, ANT	
4	3-028-895-01	TERMINAL (-), BATTERY	
* 5	1-671-314-21	BATT BOARD	
6	3-031-100-01	PACKING (BATTERY)	
7	3-028-894-01	TERMINAL (+), BATTERY	
* 8	1-671-313-21	POWER BOARD	
* 9	3-028-880-01	HEATSINK (DIODE)	
* 10	3-027-669-01	SHASSIS, TRANSFORMER	
* 11	3-378-433-01	CUSHION, SARANET	
12	3-027-681-01	TERMINAL (+/-), BATTERY	
13	3-027-673-01	LID,BATTERY CASE	
14	3-027-670-01	HANDLE	
15	3-030-768-01	COVER, HANDLE	
16	X-3377-153-1	CABINET (REAR) SUB ASSY	
17	3-033-657-01	SOUND CUSHION,(1)	
18	3-029-907-01	FOOT, RUBBER	
* 19	1-675-236-21	ANTENNA SW BOARD	
ANT1	1-754-023-11	ANTENNA, TELESCOPIC	
D901	8-719-302-38	DIODE RBV-602-01	
⚠F901	1-532-467-51	FUSE (T0.315AL/250V)	
⚠F902	1-532-505-51	FUSE (T5AL/250V)	
⚠F903	1-532-499-51	FUSE (T0.4AL/250V)	
⚠F904	1-532-388-51	FUSE (T2AL/250V)	
⚠T901	1-433-781-11	TRANSFORMER, POWER	

7-2. FRONT CABINET SECTION

▲ *A : Control (R) board*
▲ *B : Control (F) board*
▲ *C : JOG board*
▲ *D : Control (L) board*

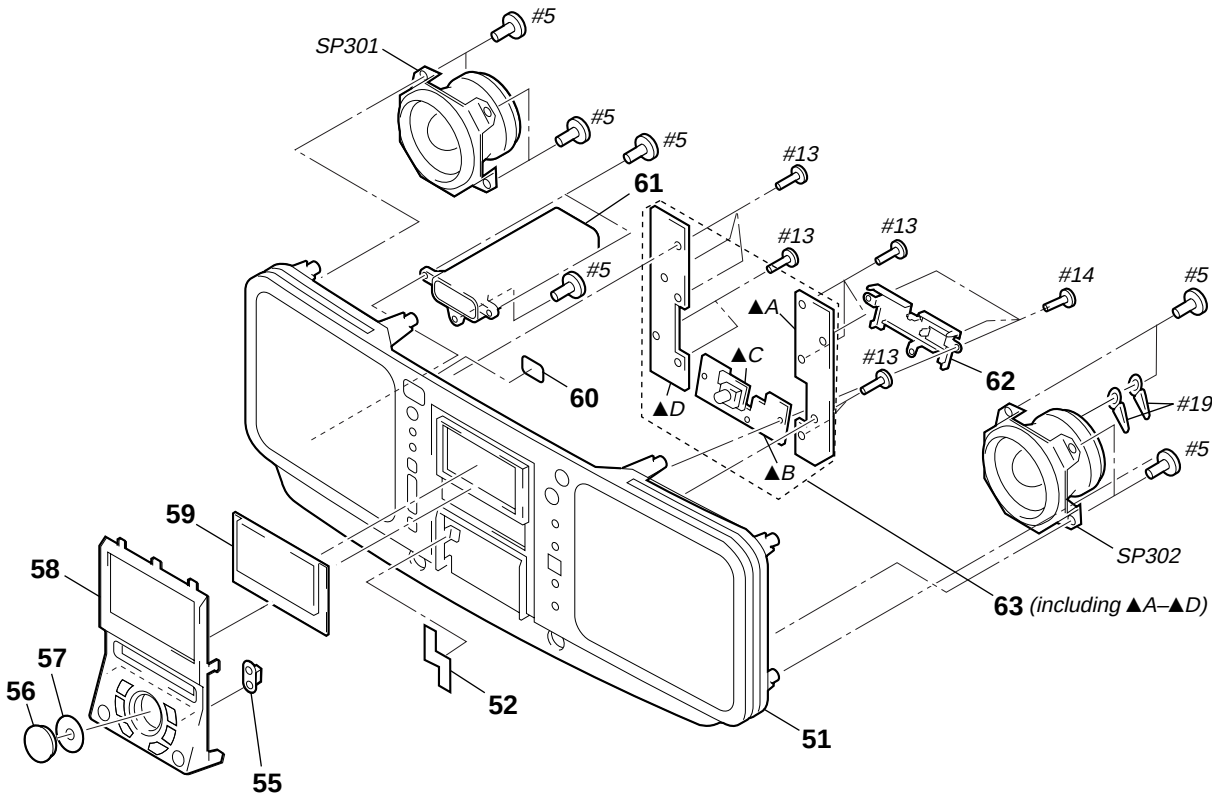

Ref. No.	Part No.	Description	Remark
51	X-3377-217-1	CABINET (FRONT) SUB ASSY	
52	3-032-945-01	SHEET (FRONT), ELECTROSTATIC	
55	3-027-653-01	PLATE (JOG), LIGHT GUIDE	
56	3-027-660-01	DIAL, JOG	
57	3-031-099-01	SHEET (JOG)	
58	X-3376-532-3	FRONT PANEL SUB ASSY	
59	3-027-658-01	WINDOW, LCD	

Ref. No.	Part No.	Description	Remark
60	3-939-014-01	WINDOW, RAY CATCHER	
61	3-027-659-01	DUCT	
62	3-028-879-01	PLATE (JOG), RETAINER	
* 63	A-3323-161-A	CONTROL (F) BOARD, COMPLETE	
SP301	1-505-829-11	SPEAKER (8cm) (L-CH)	
SP302	1-529-130-11	SPEAKER (8cm) (R-CH)	

7-3. CENTER BLOCK SECTION

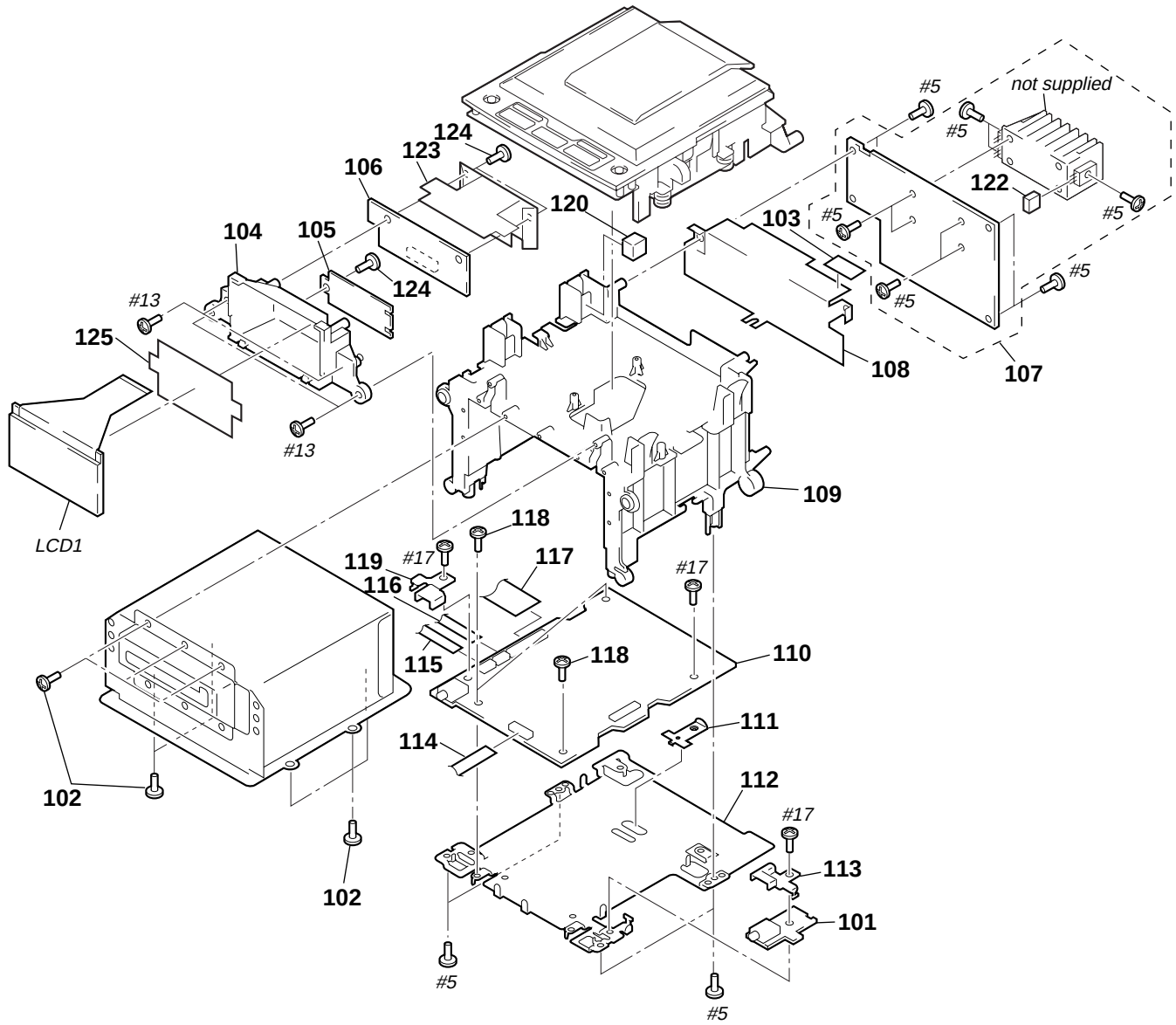

Ref. No.	Part No.	Description	Remark
* 101	1-671-318-21	LINE BOARD	
102	4-931-757-31	SCREW(DIA.2.6X8)(IT3B),TAPPING	
* 103	3-378-400-01	CUSHION, SARANET	
* 104	3-027-672-01	HOLDER, LCD	
* 105	1-671-477-21	BL BOARD	
* 106	1-671-317-21	LCD BOARD	
* 107	A-3323-158-A	AUDIO BOARD, COMPLETE	
* 108	3-032-904-01	COVER (HEAT SINK)	
* 109	3-027-671-01	CHASSIS (MAIN)	
* 110	A-3323-157-A	MAIN BOARD, COMPLETE	
111	3-030-485-01	PLATE (RESET)	
112	3-028-779-01	PLATE, BOTTOM	
* 113	3-028-797-01	BRACKET (LINE)	
114	1-783-958-11	WIRE, PARALLEL (FFC) (11 CORE)	
115	1-783-957-11	WIRE, PARALLEL (FFC) (8 CORE)	
116	1-783-956-11	WIRE, PARALLEL (FFC) (9 CORE)	
117	1-783-960-11	WIRE, PARALLEL (FFC) (26 CORE)	
118	4-933-134-41	SCREW (+PTPWH 2.6X5)	
* 119	3-028-798-01	BRACKET (HP)	
120	3-033-780-01	SPACER (GEAR A)	
* 122	1-562-327-00	SOCKET, CONNECTOR 3P	
* 123	3-031-123-01	COVER, LCD	
124	4-931-757-31	SCREW(DIA.2.6X8)(IT3B),TAPPING	
* 125	3-030-437-01	ILLUMINATOR	
LCD1	1-803-283-11	LCD UNIT	

7-4. UPPER CABINET SECTION

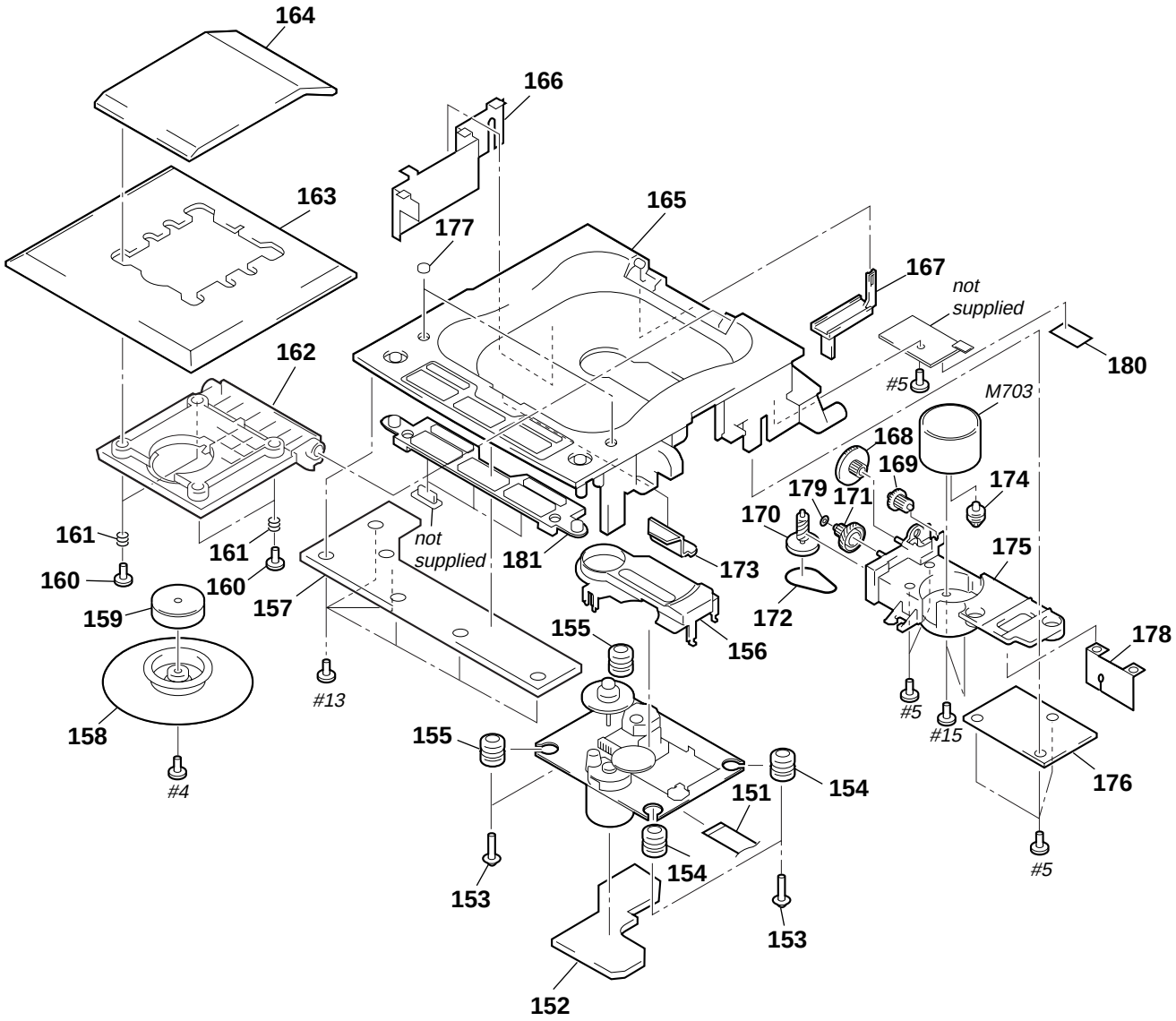

Ref. No.	Part No.	Description	Remark
151	1-783-955-11	WIRE, PARALLEL (FFC) (16 CORE)	
* 152	1-639-678-12	CD MOTOR BOARD	
153	3-921-725-01	SCREW (2.6X10), +PWH	
154	3-931-379-01	RUBBER, VIBRATION PROOF (RED)	
155	3-910-095-31	RUBBER, VIBRATION PROOF (GREEN)	
156	3-910-116-01	COVER, CD	
* 157	A-3321-849-A	CONTROL SW BOARD	
158	3-029-900-01	PLATE (KSM-213-CDM), CHUCKING	
159	1-452-732-11	MAGNET	
160	3-029-901-01	SCREW (3X8)	
161	3-028-968-01	SPRING, COMPRESSION	
162	3-027-663-01	HOLDER, CHUCKING	
163	3-027-661-01	LID, CD	
164	3-027-662-01	PLATE, CD ORNAMENTAL	
165	3-027-648-01	CABINET (UPPER)	
166	3-032-880-01	COVER (3) (CD)	

Ref. No.	Part No.	Description	Remark
167	3-028-820-01	LEVER (O/C)	
168	3-027-667-01	GEAR (C)	
169	3-027-668-01	GEAR (D)	
170	3-017-031-21	GEAR (A)	
171	3-017-032-01	GEAR (B)	
172	3-033-230-01	BELT	
173	3-027-655-01	PLATE (CD), LIGHT GUIDE	
174	2-627-174-01	PULLEY (M)	
* 175	3-027-666-01	CHASSIS, MOTOR	
* 176	A-3323-155-A	MOTOR BOARD, COMPLETE	
177	3-029-908-01	CUSHION (CD)	
* 178	3-032-893-01	COVER (4) (CD)	
179	3-033-781-01	WASHER (GEAR D)	
* 180	3-378-400-01	CUSHION, SARANET	
181	3-028-795-01	BUTTON (TOP)	
M703	1-763-224-11	MOTOR, DC (DOOR OPEN/CLOSE)	

7-5. MD SECTION (1)
(MDM-3Z)

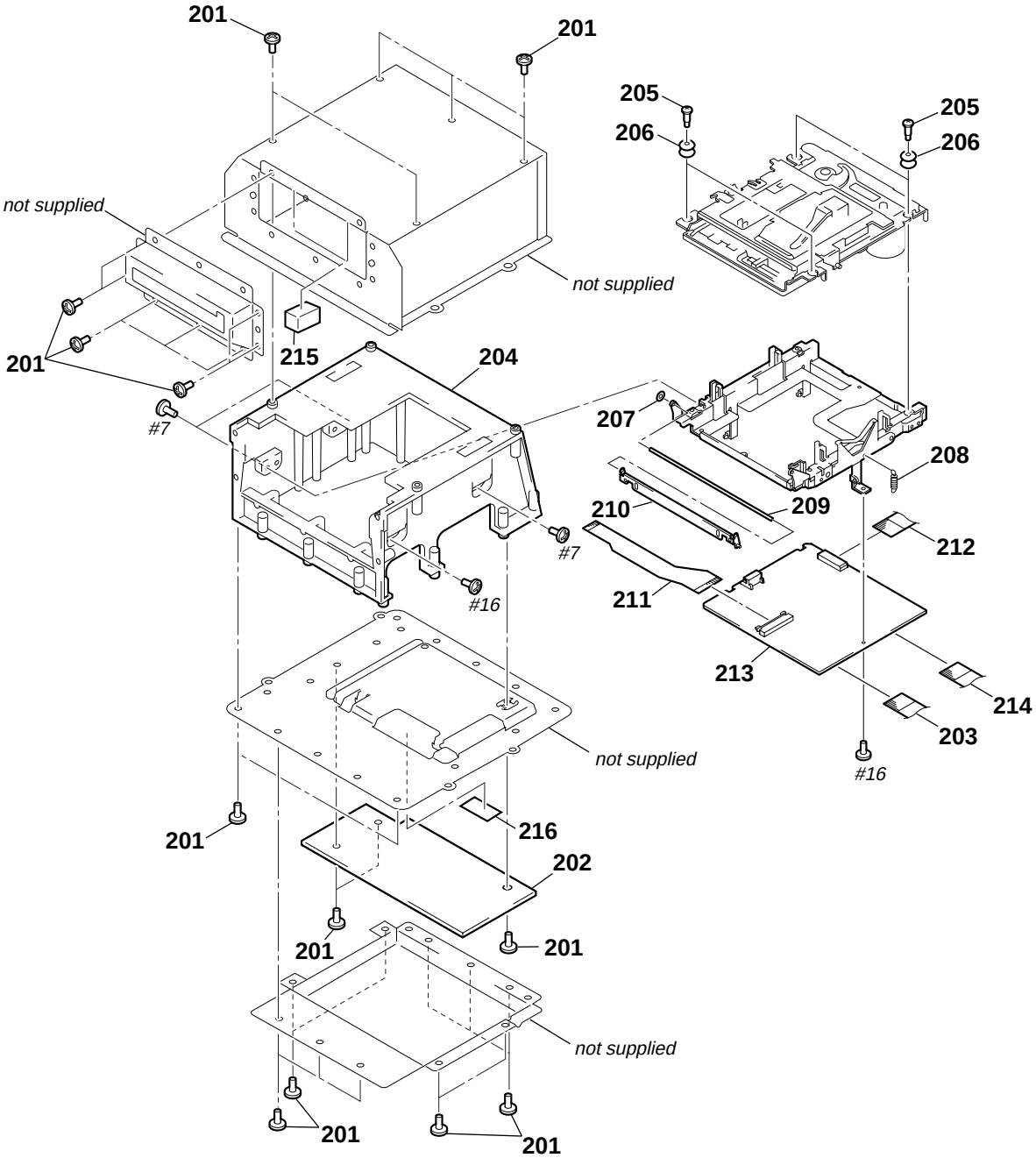

Ref. No.	Part No.	Description	Remark
201	4-931-757-31	SCREW(DIA.2.6X8)(IT3B),TAPPING	
* 202	A-3323-164-A	DG BOARD, COMPLETE	
203	1-783-961-11	WIRE, PARALLEL (FFC) (19 CORE)	
* 204	3-027-682-01	CHASSIS (MD)	
205	4-628-167-01	SCREW, STEP	
206	4-987-327-01	INSULATOR	
207	4-986-959-01	WASHER	
208	4-987-910-01	SPRING (O/C), TENSION	
209	4-987-736-01	SHAFT, SHUTTER	
210	X-3377-791-1	SHUTTER ASSY	
211	1-660-966-11	OP RALAY FLEXIBLE BOARD	
212	1-777-517-11	WIRE, PARALLEL (15 CORE)	
* 213	A-3293-900-A	BD BOARD, COMPLETE	
214	1-783-962-11	WIRE, PARALLEL (FFC) (29 CORE)	
215	3-032-950-01	CUSHION (MD), RUBBER	
216	3-378-435-01	CUSHION, SARANET	

7-6. MD SECTION (2)
(MDM-3Z)

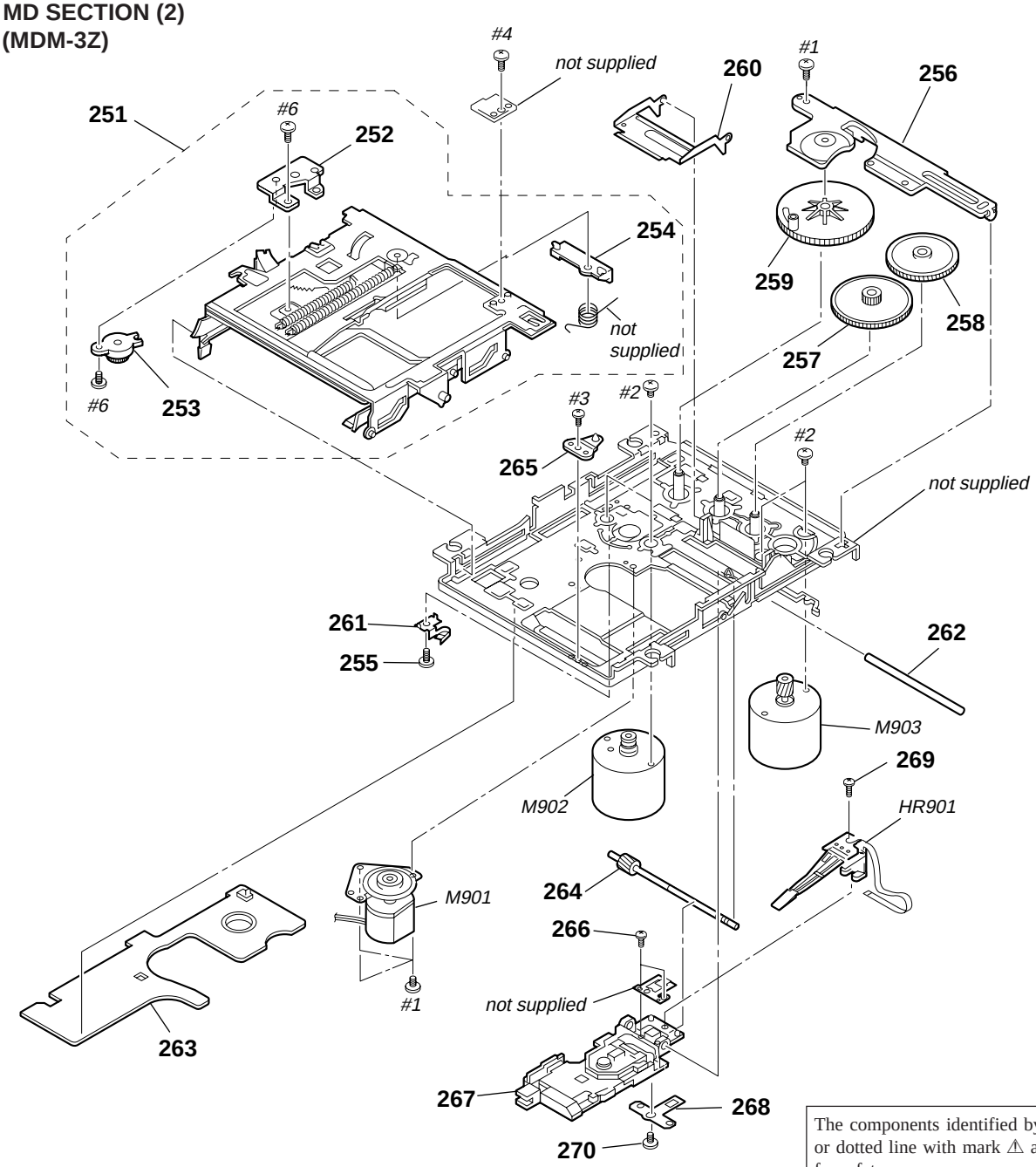

The components identified by mark ⚠ or dotted line with mark ⚠ are critical for safety.
Replace only with part number specified.

Ref. No.	Part No.	Description	Remark
251	A-4672-138-A	SLIDER COMPLETE ASSY	
* 252	4-983-439-01	BRACKET (DAMPER)	
253	3-953-235-01	DAMPER, OIL	
* 254	4-983-437-01	SLIDER (CAM)	
255	3-342-375-11	SCREW (M1.7X1.4), SPECIAL	
* 256	4-979-890-11	RETAINER (GEAR)	
257	4-979-898-01	GEAR (LB)	
258	4-979-899-01	GEAR (LC)	
259	4-979-897-01	GEAR (LA)	
260	4-979-885-01	LEVER (HEAD UP)	
261	4-979-906-11	SPRING (LEAD SCREW)	
* 262	4-984-556-01	SHAFT (MAIN SHAFT)	
* 263	1-661-774-11	SW BOARD	
264	A-3304-200-A	SCREW ASSY, LEAD	
* 265	4-983-511-02	PIN (OUTSERT)	
266	3-366-890-11	SCREW (M1.4)	
⚠267	8-583-028-02	OPTICAL PICK-UP KMS-260A	
268	4-987-061-01	SPACER (RACK)	
269	4-988-560-01	SCREW (+P1.7X6)	
270	4-955-841-11	SCREW	
HR901	1-500-396-11	HEAD, OVER WRITE	
M901	A-4672-135-A	MOTOR ASSY, SPINDLE (SPINDLE)	
M902	A-4672-133-A	MOTOR ASSY, SLED (SLED) (INCLUDING GEAR)	
M903	A-4672-134-A	MOTOR ASSY, LOADING (LOADING) (INCLUDING GEAR)	

7-7. CD OPTICAL PICK-UP SECTION (KSM-213CDM)

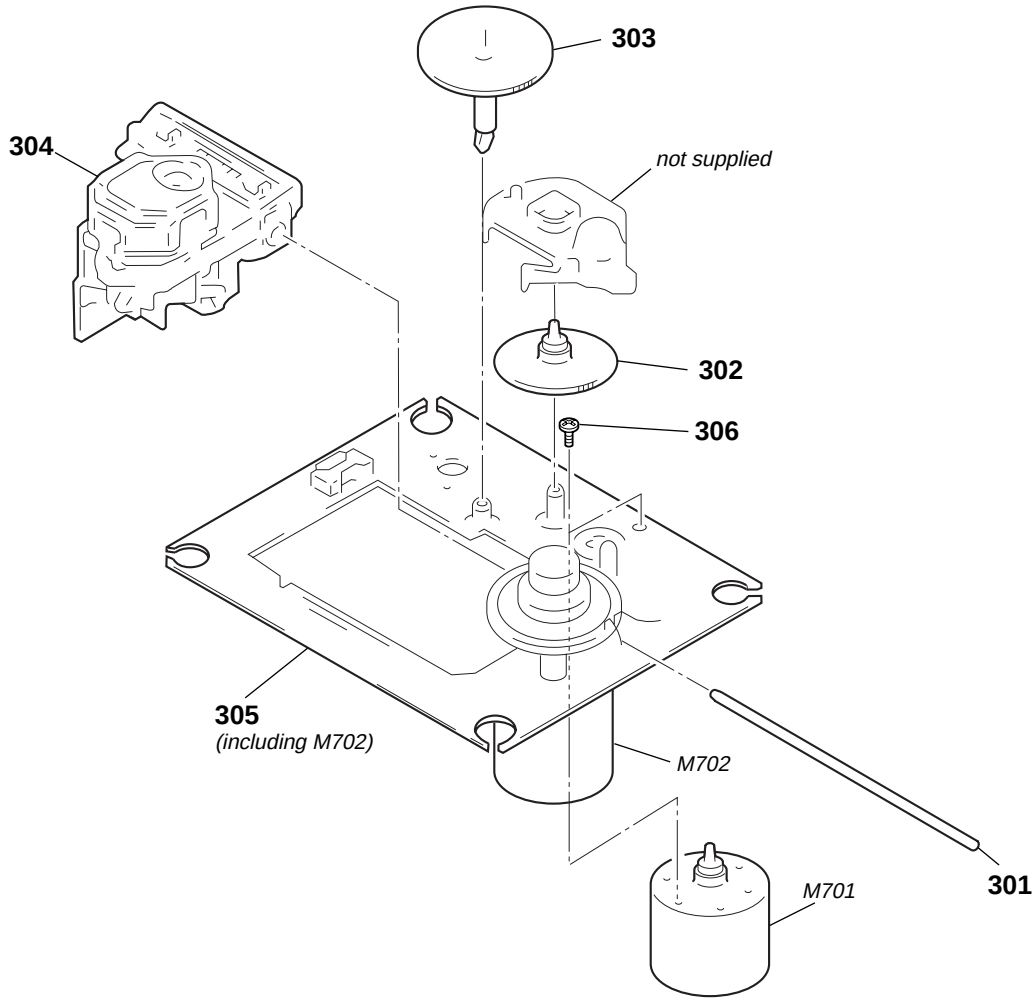

The components identified by mark ⚠ or dotted line with mark ⚠ are critical for safety.
Replace only with part number specified.

Ref. No.	Part No.	Description	Remark
301	2-626-908-01	SHAFT, SLED	
302	2-627-003-02	GEAR (B) (RP)	
303	2-626-907-01	GEAR (A)	
⚠304	8-848-483-05	OPTICAL PICK-UP KSS-213C	

Ref. No.	Part No.	Description	Remark
305	X-2626-202-1	MOTOR SHASSIS ASSY(MB) (INCLUDING M702)	(SPINDLE)
306	3-713-786-51	SCREW +P 2X3	
M701	X-2625-769-1	MOTOR GEAR ASSY (MB) (INCLUDING GEAR)	(SLED)

ANTENNA SW **AUDIO**

SECTION 8
ELECTRICAL PARTS LIST

NOTE :

- Due to standardization, replacements in the parts list may be different from the parts specified in the diagrams or the components used on the set.
- -XX, -X mean standardized parts, so they may have some difference from the original one.
- RESISTORS
  All resistors are in ohms
  METAL : Metal-film resistor
  METAL OXIDE :Metal oxide-film resistor
  F : nonflammable
- Items marked " * "are not stocked since they are seldom required for routine service. Some delay should be anticipated when ordering these items.
- SEMICONDUCTORS
  In each case, u : μ , for example :
  uA.... : μ A.... , uPA.... : μ PA....
  uPB.... : μ PB.... , uPC.... : μ PC....
  uPD.... : μ PD....
- CAPACITORS
  uF : μ F
- COILS
  uH : μ H

The components identified by mark ⚠ or dotted line with mark ⚠ are critical for safety.
Replace only with part number specified.

When indicating parts by reference number, please include the board.

Ref. No.	Part No.	Description			Remark
*	1-675-236-21	ANTENNA SW BOARD			
		**********			
		< SWITCH >			
S1	1-771-672-11	SWITCH, SLIDE (FM ANTENNA SELECTOR)			
**********					
*	A-3323-158-A	AUDIO BOARD, COMPLETE			
		**********			
*	1-562-327-00	SOCKET, CONNECTOR 3P			
	7-685-647-79	SCREW +BVTP 3X10 TYPE2 N-S			
		< CAPACITOR >			
C112	1-126-960-11	ELECT	1uF	20%	50V
C113	1-136-165-00	FILM	0.1uF	5%	50V
C114	1-136-157-00	FILM	0.022uF	5%	50V
C115	1-130-480-00	MYLAR	0.0056uF	5%	50V
C116	1-136-165-00	FILM	0.1uF	5%	50V
C117	1-136-165-00	FILM	0.1uF	5%	50V
C118	1-126-964-11	ELECT	10uF	20%	50V
C119	1-126-963-11	ELECT	4.7uF	20%	50V
C120	1-163-009-11	CERAMIC CHIP	0.001uF	10%	50V
C121	1-104-665-11	ELECT	100uF	20%	10V
C122	1-107-725-11	CERAMIC CHIP	0.1uF	10%	16V
C123	1-126-960-11	ELECT	1uF	20%	50V
C124	1-136-165-00	FILM	0.1uF	5%	50V
C125	1-163-009-11	CERAMIC CHIP	0.001uF	10%	50V
C126	1-136-165-00	FILM	0.1uF	5%	50V
C127	1-163-021-91	CERAMIC CHIP	0.01uF	10%	50V
C128	1-126-963-11	ELECT	4.7uF	20%	50V
C129	1-126-934-11	ELECT	220uF	20%	10V
C130	1-163-259-91	CERAMIC CHIP	220PF	5%	50V
C212	1-126-960-11	ELECT	1uF	20%	50V
C213	1-136-165-00	FILM	0.1uF	5%	50V
C214	1-136-157-00	FILM	0.022uF	5%	50V
C215	1-130-480-00	MYLAR	0.0056uF	5%	50V
C216	1-136-165-00	FILM	0.1uF	5%	50V
C217	1-136-165-00	FILM	0.1uF	5%	50V
C218	1-126-964-11	ELECT	10uF	20%	50V
C219	1-126-961-11	ELECT	2.2uF	20%	50V
C220	1-163-009-11	CERAMIC CHIP	0.001uF	10%	50V
C221	1-104-665-11	ELECT	100uF	20%	10V
C222	1-107-725-11	CERAMIC CHIP	0.1uF	10%	16V

Ref. No.	Part No.	Description			Remark
C223	1-130-495-00	MYLAR	0.1uF	5%	50V
C224	1-136-165-00	FILM	0.1uF	5%	50V
C225	1-163-017-00	CERAMIC CHIP	0.0047uF	5%	50V
C226	1-136-165-00	FILM	0.1uF	5%	50V
C227	1-163-037-11	CERAMIC CHIP	0.022uF	10%	25V
C228	1-126-959-11	ELECT	0.47uF	20%	50V
C229	1-126-934-11	ELECT	220uF	20%	10V
C230	1-163-259-91	CERAMIC CHIP	220PF	5%	50V
C301	1-164-492-11	CERAMIC CHIP	0.15uF	10%	16V
C302	1-163-021-91	CERAMIC CHIP	0.01uF	10%	50V
C303	1-124-994-11	ELECT	100uF	20%	10V
C304	1-163-021-91	CERAMIC CHIP	0.01uF	10%	50V
C305	1-124-995-11	ELECT	220uF	20%	10V
C306	1-128-551-11	ELECT	22uF	20%	25V
C309	1-126-959-11	ELECT	0.47uF	20%	50V
C310	1-163-009-11	CERAMIC CHIP	0.001uF	10%	50V
C311	1-163-009-11	CERAMIC CHIP	0.001uF	10%	50V
C312	1-107-725-11	CERAMIC CHIP	0.1uF	10%	16V
C313	1-163-021-91	CERAMIC CHIP	0.01uF	10%	50V
C314	1-163-021-91	CERAMIC CHIP	0.01uF	10%	50V
C315	1-126-964-11	ELECT	10uF	20%	50V
C316	1-163-017-00	CERAMIC CHIP	0.0047uF	5%	50V
C317	1-124-994-11	ELECT	100uF	20%	10V
C318	1-109-982-11	CERAMIC CHIP	1uF	10%	10V
C319	1-126-934-11	ELECT	220uF	20%	10V
C320	1-107-725-11	CERAMIC CHIP	0.1uF	10%	16V
C321	1-126-934-11	ELECT	220uF	20%	10V
C322	1-126-925-11	ELECT	470uF	20%	10V
C323	1-124-994-11	ELECT	100uF	20%	10V
C324	1-107-725-11	CERAMIC CHIP	0.1uF	10%	16V
C325	1-126-934-11	ELECT	220uF	20%	10V
C326	1-126-960-11	ELECT	1uF	20%	50V
C327	1-126-964-11	ELECT	10uF	20%	50V
C328	1-126-964-11	ELECT	10uF	20%	50V
C329	1-163-017-00	CERAMIC CHIP	0.0047uF	5%	50V
C330	1-126-937-11	ELECT	4700uF	20%	16V
C331	1-117-207-11	ELECT(BLOCK)	6800uF	20%	25V
C332	1-163-019-00	CERAMIC CHIP	0.0068uF	10%	50V
C333	1-126-966-11	ELECT	33uF	20%	16V
C334	1-163-021-91	CERAMIC CHIP	0.01uF	10%	50V
C335	1-126-964-11	ELECT	10uF	20%	50V
C336	1-126-964-11	ELECT	10uF	20%	50V
C337	1-107-725-11	CERAMIC CHIP	0.1uF	10%	16V

Ref. No.	Part No.	Description			Remark
C338	1-104-665-11	ELECT	100uF	20%	10V
C339	1-163-021-91	CERAMIC CHIP	0.01uF	10%	50V
C341	1-107-682-11	CERAMIC CHIP	1uF	10%	16V
C342	1-107-725-11	CERAMIC CHIP	0.1uF	10%	16V
C343	1-126-960-11	ELECT	1uF	20%	50V
C345	1-126-963-11	ELECT	4.7uF	20%	50V
C346	1-104-665-11	ELECT	100uF	20%	10V
C347	1-104-665-11	ELECT	100uF	20%	10V
C348	1-163-259-91	CERAMIC CHIP	220PF	5%	50V
		< CONNECTOR >			
* CN301	1-564-509-11	PLUG, CONNECTOR 6P			
* CN302	1-564-510-11	PLUG, CONNECTOR 7P			
		< DIODE >			
D301	8-719-988-61	DIODE 1SS355TE-17			
D302	8-719-056-83	DIODE UDZ-TE-17-6.8B			
D303	8-719-976-99	DIODE DTZ5.1B			
D304	8-719-988-61	DIODE 1SS355TE-17			
D306	8-719-056-85	DIODE UDZ-TE-17-8.2B			
D307	8-719-988-61	DIODE 1SS355TE-17			
		< IC >			
IC305	8-759-538-94	IC LA4663			
IC307	8-759-636-55	IC M5218AFP			
IC309	8-759-701-02	IC NJM2073M			
IC311	8-759-100-96	IC NJM4558M-TE2			
IC312	8-759-569-64	IC BH3863F-E2			
		< JUMPER RESISTOR >			
JC557	1-216-295-00	METAL CHIP	0	5%	1/10W
JC558	1-216-296-00	METAL CHIP	0	5%	1/8W
JC559	1-216-296-00	METAL CHIP	0	5%	1/8W
JC560	1-216-296-00	METAL CHIP	0	5%	1/8W
JC561	1-216-295-00	METAL CHIP	0	5%	1/10W
JC562	1-216-295-00	METAL CHIP	0	5%	1/10W
JC564	1-216-295-00	METAL CHIP	0	5%	1/10W
JC565	1-216-295-00	METAL CHIP	0	5%	1/10W
JC566	1-216-295-00	METAL CHIP	0	5%	1/10W
		< TRANSISTOR >			
Q101	8-729-920-31	TRANSISTOR DTC343TK			
Q104	8-729-920-31	TRANSISTOR DTC343TK			
Q105	8-729-920-31	TRANSISTOR DTC343TK			
Q201	8-729-920-31	TRANSISTOR DTC343TK			
Q204	8-729-920-31	TRANSISTOR DTC343TK			
Q205	8-729-920-31	TRANSISTOR DTC343TK			
Q301	8-729-920-85	TRANSISTOR 2SD1664-QR			
Q304	8-729-920-41	TRANSISTOR FMC3			
Q305	8-729-120-28	TRANSISTOR 2SC1623-L5L6			
Q306	8-729-021-82	TRANSISTOR 2SD2396K			
Q307	8-729-922-62	TRANSISTOR 2SD1760F5-TLQ			
Q308	8-729-903-46	TRANSISTOR 2SB1132-P			
Q309	8-729-027-46	TRANSISTOR DTC114YKA-T146			
Q310	8-729-920-41	TRANSISTOR FMC3			
Q313	8-729-120-28	TRANSISTOR 2SC1623-L5L6			
Q314	8-729-027-46	TRANSISTOR DTC114YKA-T146			

Ref. No.	Part No.	Description			Remark
		< RESISTOR >			
R101	1-216-013-00	METAL CHIP	33	5%	1/10W
R111	1-216-295-00	METAL CHIP	0	5%	1/10W
R112	1-216-057-00	METAL CHIP	2.2K	5%	1/10W
R117	1-216-093-91	RES,CHIP	68K	5%	1/10W
R118	1-216-073-00	METAL CHIP	10K	5%	1/10W
R119	1-216-073-00	METAL CHIP	10K	5%	1/10W
R120	1-216-073-00	METAL CHIP	10K	5%	1/10W
R121	1-216-296-00	METAL CHIP	0	5%	1/8W
R122	1-216-061-00	METAL CHIP	3.3K	5%	1/10W
R123	1-216-049-91	RES,CHIP	1K	5%	1/10W
R124	1-216-055-00	METAL CHIP	1.8K	5%	1/10W
R125	1-216-049-91	RES,CHIP	1K	5%	1/10W
R126	1-216-029-00	METAL CHIP	150	5%	1/10W
R127	1-216-214-00	RES,CHIP	4.7K	5%	1/8W
R128	1-216-308-00	METAL CHIP	4.7	5%	1/10W
R129	1-216-049-91	RES,CHIP	1K	5%	1/10W
R130	1-216-298-00	METAL CHIP	2.2	5%	1/10W
R132	1-216-298-00	METAL CHIP	2.2	5%	1/10W
R151	1-216-121-91	RES,CHIP	1M	5%	1/10W
R152	1-216-121-91	RES,CHIP	1M	5%	1/10W
R201	1-216-013-00	METAL CHIP	33	5%	1/10W
R211	1-216-063-91	RES,CHIP	3.9K	5%	1/10W
R212	1-216-057-00	METAL CHIP	2.2K	5%	1/10W
R217	1-216-093-91	RES,CHIP	68K	5%	1/10W
R218	1-216-073-00	METAL CHIP	10K	5%	1/10W
R219	1-216-057-00	METAL CHIP	2.2K	5%	1/10W
R220	1-216-057-00	METAL CHIP	2.2K	5%	1/10W
R221	1-216-295-00	METAL CHIP	0	5%	1/10W
R222	1-216-064-00	METAL CHIP	4.3K	5%	1/10W
R223	1-216-049-91	RES,CHIP	1K	5%	1/10W
R224	1-216-055-00	METAL CHIP	1.8K	5%	1/10W
R225	1-216-049-91	RES,CHIP	1K	5%	1/10W
R226	1-216-029-00	METAL CHIP	150	5%	1/10W
R227	1-216-065-91	RES,CHIP	4.7K	5%	1/10W
R228	1-216-308-00	METAL CHIP	4.7	5%	1/10W
R229	1-216-049-91	RES,CHIP	1K	5%	1/10W
R230	1-216-298-00	METAL CHIP	2.2	5%	1/10W
R232	1-216-298-00	METAL CHIP	2.2	5%	1/10W
R251	1-216-121-91	RES,CHIP	1M	5%	1/10W
R252	1-216-121-91	RES,CHIP	1M	5%	1/10W
R302	1-216-049-91	RES,CHIP	1K	5%	1/10W
R303	1-216-049-91	RES,CHIP	1K	5%	1/10W
R304	1-216-049-91	RES,CHIP	1K	5%	1/10W
R305	1-216-061-00	METAL CHIP	3.3K	5%	1/10W
R306	1-216-075-00	METAL CHIP	12K	5%	1/10W
R307	1-216-037-00	METAL CHIP	330	5%	1/10W
R309	1-216-037-00	METAL CHIP	330	5%	1/10W
R310	1-216-081-00	METAL CHIP	22K	5%	1/10W
R311	1-216-105-91	RES,CHIP	220K	5%	1/10W
R312	1-216-075-00	METAL CHIP	12K	5%	1/10W
R313	1-216-075-00	METAL CHIP	12K	5%	1/10W
R314	1-216-073-00	METAL CHIP	10K	5%	1/10W
R315	1-216-073-00	METAL CHIP	10K	5%	1/10W
R316	1-216-073-00	METAL CHIP	10K	5%	1/10W
R317	1-216-113-00	METAL CHIP	470K	5%	1/10W
R318	1-216-295-00	METAL CHIP	0	5%	1/10W

AUDIO **BATT** **BD**

Ref. No.	Part No.	Description			Remark
R319	1-216-049-91	RES,CHIP	1K	5%	1/10W
R320	1-216-121-91	RES,CHIP	1M	5%	1/10W
R321	1-216-041-00	METAL CHIP	470	5%	1/10W
R322	1-216-025-91	RES,CHIP	100	5%	1/10W
R327	1-216-049-91	RES,CHIP	1K	5%	1/10W
R328	1-216-089-91	RES,CHIP	47K	5%	1/10W
R331	1-216-049-91	RES,CHIP	1K	5%	1/10W
R332	1-216-049-91	RES,CHIP	1K	5%	1/10W
R335	1-216-017-91	RES,CHIP	47	5%	1/10W
R336	1-216-017-91	RES,CHIP	47	5%	1/10W
R339	1-216-089-91	RES,CHIP	47K	5%	1/10W
R341	1-216-041-00	METAL CHIP	470	5%	1/10W
R343	1-216-013-00	METAL CHIP	33	5%	1/10W
R344	1-216-049-91	RES,CHIP	1K	5%	1/10W
R345	1-216-049-91	RES,CHIP	1K	5%	1/10W
R346	1-216-049-91	RES,CHIP	1K	5%	1/10W
R348	1-216-041-00	METAL CHIP	470	5%	1/10W
**********					
*	1-671-314-21	BATT BOARD			
		**********			
	3-028-894-01	TERMINAL (+), BATTERY			
	3-028-895-01	TERMINAL (-), BATTERY			
		< CAPACITOR >			
C915	1-163-021-91	CERAMIC CHIP	0.01uF	10%	50V
**********					
*	A-3293-900-A	BD BOARD, COMPLETE			
		**********			
		< CAPACITOR >			
C101	1-104-851-11	TANTAL. CHIP	10uF	20%	10V
C102	1-163-038-91	CERAMIC CHIP	0.1uF		25V
C103	1-104-851-11	TANTAL. CHIP	10uF	20%	10V
C104	1-104-851-11	TANTAL. CHIP	10uF	20%	10V
C105	1-163-021-91	CERAMIC CHIP	0.01uF	10%	50V
C106	1-163-275-11	CERAMIC CHIP	0.001uF	5%	50V
C107	1-163-038-91	CERAMIC CHIP	0.1uF		25V
C108	1-163-038-91	CERAMIC CHIP	0.1uF		25V
C109	1-163-037-11	CERAMIC CHIP	0.022uF	10%	25V
C110	1-163-038-91	CERAMIC CHIP	0.1uF		25V
C111	1-164-344-11	CERAMIC CHIP	0.068uF	10%	25V
C112	1-163-017-00	CERAMIC CHIP	0.0047uF	5%	50V
C113	1-107-682-11	CERAMIC CHIP	1uF	10%	16V
C115	1-164-489-11	CERAMIC CHIP	0.22uF	10%	16V
C116	1-163-037-11	CERAMIC CHIP	0.022uF	10%	25V
C117	1-164-004-11	CERAMIC CHIP	0.1uF	10%	25V
C119	1-104-851-11	TANTAL. CHIP	10uF	20%	10V
C121	1-126-206-11	ELECT CHIP	100uF	20%	6.3V
C122	1-163-021-91	CERAMIC CHIP	0.01uF	10%	50V
C123	1-163-038-91	CERAMIC CHIP	0.1uF		25V
C124	1-163-038-91	CERAMIC CHIP	0.1uF		25V
C127	1-163-038-91	CERAMIC CHIP	0.1uF		25V
C128	1-163-021-91	CERAMIC CHIP	0.01uF	10%	50V
C129	1-107-823-11	CERAMIC CHIP	0.47uF	10%	16V
C130	1-163-251-11	CERAMIC CHIP	100PF	5%	50V
C131	1-163-023-00	CERAMIC CHIP	0.015uF	5%	50V

Ref. No.	Part No.	Description			Remark
C132	1-107-823-11	CERAMIC CHIP	0.47uF	10%	16V
C133	1-163-017-00	CERAMIC CHIP	0.0047uF	5%	50V
C134	1-163-038-91	CERAMIC CHIP	0.1uF		25V
C135	1-163-038-91	CERAMIC CHIP	0.1uF		25V
C136	1-126-206-11	ELECT CHIP	100uF	20%	6.3V
C141	1-163-038-91	CERAMIC CHIP	0.1uF		25V
C142	1-163-251-11	CERAMIC CHIP	100PF	5%	50V
C143	1-163-251-11	CERAMIC CHIP	100PF	5%	50V
C144	1-163-251-11	CERAMIC CHIP	100PF	5%	50V
C146	1-163-038-91	CERAMIC CHIP	0.1uF		25V
C151	1-126-206-11	ELECT CHIP	100uF	20%	6.3V
C152	1-163-038-91	CERAMIC CHIP	0.1uF		25V
C153	1-163-021-91	CERAMIC CHIP	0.01uF	10%	50V
C156	1-163-038-91	CERAMIC CHIP	0.1uF		25V
C158	1-163-019-00	CERAMIC CHIP	0.0068uF	10%	50V
C160	1-104-601-11	ELECT CHIP	10uF	20%	10V
C161	1-104-601-11	ELECT CHIP	10uF	20%	10V
C163	1-163-021-91	CERAMIC CHIP	0.01uF	10%	50V
C164	1-163-021-91	CERAMIC CHIP	0.01uF	10%	50V
C167	1-163-038-91	CERAMIC CHIP	0.1uF		25V
C168	1-163-038-91	CERAMIC CHIP	0.1uF		25V
C169	1-104-851-11	TANTAL. CHIP	10uF	20%	10V
C171	1-163-038-91	CERAMIC CHIP	0.1uF		25V
C181	1-126-206-11	ELECT CHIP	100uF	20%	6.3V
C182	1-163-038-91	CERAMIC CHIP	0.1uF		25V
C183	1-163-038-91	CERAMIC CHIP	0.1uF		25V
C184	1-107-836-11	ELECT CHIP	22uF	20%	8V
C185	1-164-611-11	CERAMIC CHIP	0.001uF	10%	500V
C187	1-126-206-11	ELECT CHIP	100uF	20%	6.3V
C188	1-163-021-91	CERAMIC CHIP	0.01uF	10%	50V
C189	1-163-989-11	CERAMIC CHIP	0.033uF	10%	25V
C190	1-126-206-11	ELECT CHIP	100uF	20%	6.3V
C191	1-163-038-91	CERAMIC CHIP	0.1uF		25V
C195	1-164-346-11	CERAMIC CHIP	1uF		16V
C196	1-163-038-91	CERAMIC CHIP	0.1uF		25V
C197	1-163-038-91	CERAMIC CHIP	0.1uF		25V
		< CONNECTOR >			
CN101	1-766-508-11	CONNECTOR, FFC/FPC (ZIF) 22P			
CN102	1-778-461-11	CONNECTOR, FFC/FPC 29P			
CN103	1-778-460-11	CONNECTOR, FFC/FPC 19P			
CN104	1-766-898-21	HOUSING, CONNECTOR(PC BOARD)4P			
CN106	1-770-698-11	CONNECTOR, FFC/FPC 15P			
CN110	1-774-731-21	PIN, CONNECTOR (PC BOARD) 5P			
		< DIODE >			
D101	8-719-988-61	DIODE 1SS355TE-17			
D181	8-719-046-86	DIODE F1J6TP			
D183	8-719-046-86	DIODE F1J6TP			
		< IC >			
IC101	8-752-074-77	IC CXA2523R			
IC103	8-729-903-10	TRANSISTOR FMW1			
IC121	8-752-384-47	IC CXD2652AR			
IC122	8-759-234-20	IC TC7S08F			
IC123	8-759-242-70	IC TC7WU04F			
IC124	8-759-473-29	IC MN41V4400SJ-08-T1			

Ref. No.	Part No.	Description			Remark
IC152	8-759-430-25	IC BH6511FS			
IC171	8-759-428-58	IC XL24C01AF-E2			
IC181	8-759-095-65	IC TC74ACT540FS			
IC192	8-759-426-95	IC L88MS33T-TL			
		< COIL >			
L101	1-414-235-11	INDUCTOR CHIP			
L102	1-414-235-11	INDUCTOR CHIP			
L103	1-414-235-11	INDUCTOR CHIP			
L105	1-414-235-11	INDUCTOR CHIP			
L106	1-414-235-11	INDUCTOR CHIP			
L121	1-414-235-11	INDUCTOR CHIP			
L122	1-414-235-11	INDUCTOR CHIP			
L151	1-412-622-51	INDUCTOR	10uH		
L152	1-412-622-51	INDUCTOR	10uH		
L153	1-412-039-51	INDUCTOR CHIP	100uH		
L154	1-412-039-51	INDUCTOR CHIP	100uH		
L161	1-414-235-11	INDUCTOR CHIP			
L162	1-414-235-11	INDUCTOR CHIP			
		< TRANSISTOR >			
Q101	8-729-028-91	TRANSISTOR	DTA144EUA-T106		
Q102	8-729-026-53	TRANSISTOR	2SA1576A-T106-QR		
Q103	8-729-028-99	TRANSISTOR	DTC114YUA-T106		
Q104	8-729-028-99	TRANSISTOR	DTC114YUA-T106		
Q162	8-729-101-07	TRANSISTOR	2SB798-DL		
Q163	8-729-028-91	TRANSISTOR	DTA144EUA-T106		
Q180	8-729-028-96	TRANSISTOR	DTC114EUA-T106		
Q181	8-729-018-75	TRANSISTOR	2SJ278MY		
Q182	8-729-017-65	TRANSISTOR	2SK1764KY		
		< RESISTOR >			
R101	1-216-295-00	METAL CHIP	0	5%	1/10W
R103	1-216-049-91	RES,CHIP	1K	5%	1/10W
R104	1-216-073-00	METAL CHIP	10K	5%	1/10W
R105	1-216-065-91	RES,CHIP	4.7K	5%	1/10W
R106	1-216-133-00	METAL CHIP	3.3M	5%	1/10W
R107	1-216-113-00	METAL CHIP	470K	5%	1/10W
R109	1-216-295-00	METAL CHIP	0	5%	1/10W
R110	1-216-073-00	METAL CHIP	10K	5%	1/10W
R111	1-216-295-00	METAL CHIP	0	5%	1/10W
R112	1-216-089-91	RES,CHIP	47K	5%	1/10W
R113	1-216-049-91	RES,CHIP	1K	5%	1/10W
R115	1-216-049-91	RES,CHIP	1K	5%	1/10W
R117	1-216-113-00	METAL CHIP	470K	5%	1/10W
R120	1-216-025-91	RES,CHIP	100	5%	1/10W
R121	1-216-097-91	RES,CHIP	100K	5%	1/10W
R123	1-216-033-00	METAL CHIP	220	5%	1/10W
R124	1-216-025-91	RES,CHIP	100	5%	1/10W
R125	1-216-025-91	RES,CHIP	100	5%	1/10W
R127	1-216-025-91	RES,CHIP	100	5%	1/10W
R131	1-216-073-00	METAL CHIP	10K	5%	1/10W
R132	1-216-097-91	RES,CHIP	100K	5%	1/10W
R133	1-216-117-00	METAL CHIP	680K	5%	1/10W
R134	1-216-049-91	RES,CHIP	1K	5%	1/10W
R135	1-216-061-00	METAL CHIP	3.3K	5%	1/10W
R136	1-216-049-91	RES,CHIP	1K	5%	1/10W
R137	1-216-025-91	RES,CHIP	100	5%	1/10W

Ref. No.	Part No.	Description			Remark
R140	1-216-029-00	METAL CHIP	150	5%	1/10W
R141	1-216-295-00	METAL CHIP	0	5%	1/10W
R142	1-216-073-00	METAL CHIP	10K	5%	1/10W
R143	1-216-073-00	METAL CHIP	10K	5%	1/10W
R144	1-216-025-91	RES,CHIP	100	5%	1/10W
R146	1-216-037-00	METAL CHIP	330	5%	1/10W
R147	1-216-025-91	RES,CHIP	100	5%	1/10W
R148	1-216-045-00	METAL CHIP	680	5%	1/10W
R150	1-216-295-00	METAL CHIP	0	5%	1/10W
R158	1-216-097-91	RES,CHIP	100K	5%	1/10W
R159	1-216-097-91	RES,CHIP	100K	5%	1/10W
R161	1-216-057-00	METAL CHIP	2.2K	5%	1/10W
R162	1-216-057-00	METAL CHIP	2.2K	5%	1/10W
R163	1-216-057-00	METAL CHIP	2.2K	5%	1/10W
R164	1-216-045-00	METAL CHIP	680	5%	1/10W
R165	1-216-097-91	RES,CHIP	100K	5%	1/10W
R166	1-220-149-11	REGISTER	2.2	10%	1/2W
R167	1-216-065-91	RES,CHIP	4.7K	5%	1/10W
R169	1-219-724-11	METAL CHIP	1	1%	1/4W
R170	1-216-073-00	METAL CHIP	10K	5%	1/10W
R171	1-216-073-00	METAL CHIP	10K	5%	1/10W
R172	1-216-295-00	METAL CHIP	0	5%	1/10W
R173	1-216-121-91	RES,CHIP	1M	5%	1/10W
R175	1-216-061-00	METAL CHIP	3.3K	5%	1/10W
R176	1-216-295-00	METAL CHIP	0	5%	1/10W
R177	1-216-061-00	METAL CHIP	3.3K	5%	1/10W
R178	1-216-295-00	METAL CHIP	0	5%	1/10W
R179	1-216-089-91	RES,CHIP	47K	5%	1/10W
R180	1-216-073-00	METAL CHIP	10K	5%	1/10W
R181	1-216-073-00	METAL CHIP	10K	5%	1/10W
R182	1-216-089-91	RES,CHIP	47K	5%	1/10W
R183	1-216-089-91	RES,CHIP	47K	5%	1/10W
R184	1-216-073-00	METAL CHIP	10K	5%	1/10W
R185	1-216-073-00	METAL CHIP	10K	5%	1/10W
R186	1-216-296-00	METAL CHIP	0	5%	1/8W
R187	1-216-296-00	METAL CHIP	0	5%	1/8W
R188	1-216-073-00	METAL CHIP	10K	5%	1/10W
R189	1-216-073-00	METAL CHIP	10K	5%	1/10W
R190	1-216-073-00	METAL CHIP	10K	5%	1/10W
R195	1-216-295-00	METAL CHIP	0	5%	1/10W
R196	1-216-295-00	METAL CHIP	0	5%	1/10W
R198	1-216-295-00	METAL CHIP	0	5%	1/10W
R199	1-216-295-00	METAL CHIP	0	5%	1/10W
R200	1-216-295-00	METAL CHIP	0	5%	1/10W
R201	1-216-295-00	METAL CHIP	0	5%	1/10W
R202	1-216-295-00	METAL CHIP	0	5%	1/10W
R502	1-216-295-00	METAL CHIP	0	5%	1/10W
R504	1-216-295-00	METAL CHIP	0	5%	1/10W

****

*	1-671-477-21	BL BOARD	
		*********	
		< PILOT LAMP >	
PL553	1-517-848-11	LAMP, PILOT (LCD BACK-LIGHT)	
PL554	1-517-848-11	LAMP, PILOT (LCD BACK-LIGHT)	
PL555	1-517-848-11	LAMP, PILOT (LCD BACK-LIGHT)	

****

CD MOROR | CONTROL (F) | CONTROL (L) | CONTROL (R) | JOG

Ref. No.	Part No.	Description			Remark
*	1-639-678-12	CD MOTOR BOARD			
		**********			
		< CONNECTOR >			
CNP707	1-564-722-11	PIN, CONNECTOR (SMALL TYPE) 6P			
		< SWITCH >			
S701	1-572-085-11	SWITCH, LEAF (LIMIT)			
**********					
*	A-3323-161-A	CONTROL (F) BOARD, COMPLETE			
		**********			
		< CAPACITOR >			
C555	1-163-038-91	CERAMIC CHIP	0.1uF		25V
C556	1-163-038-91	CERAMIC CHIP	0.1uF		25V
		< CONNECTOR >			
CN551	1-563-614-31	HOUSING, CONNECTOR 11P			
		< DIODE >			
D553	8-719-047-57	LED SLA-362MT3F-A47 (AMS/PRESET)			
D554	8-719-047-57	LED SLA-362MT3F-A47 (SELECT)			
		< TRANSISTOR >			
Q553	8-729-027-58	TRANSISTOR DTC143ZKA-T146			
Q554	8-729-027-58	TRANSISTOR DTC143ZKA-T146			
		< RESISTOR >			
R551	1-216-033-00	METAL CHIP	220	5%	1/10W
R552	1-216-079-00	METAL CHIP	18K	5%	1/10W
R558	1-216-069-00	METAL CHIP	6.8K	5%	1/10W
R559	1-216-061-00	METAL CHIP	3.3K	5%	1/10W
R560	1-216-056-00	RES,CHIP	2K	5%	1/10W
R561	1-216-051-00	METAL CHIP	1.2K	5%	1/10W
R562	1-216-048-00	METAL CHIP	910	5%	1/10W
R563	1-216-045-00	METAL CHIP	680	5%	1/10W
		< SWITCH >			
S557	1-692-014-11	SWITCH, KEY BOARD (DELETE CLOCK)			
S558	1-692-014-11	SWITCH, KEY BOARD (TUNE ⇦ – ◀◀)			
S559	1-692-014-11	SWITCH, KEY BOARD (NO CANCEL)			
S560	1-692-014-11	SWITCH, KEY BOARD (EDIT)			
S561	1-692-014-11	SWITCH, KEY BOARD (YES ENTER)			
S562	1-692-014-11	SWITCH, KEY BOARD (DISPLAY)			
S563	1-692-014-11	SWITCH, KEY BOARD (TUNE + ⇨▶▶)			
S564	1-692-014-11	SWITCH, KEY BOARD (INSERT TIMER)			
		CONTROL (L) BOARD			
		**********			
		< CAPACITOR >			
C557	1-163-021-91	CERAMIC CHIP	0.01uF	10%	50V
C558	1-124-259-11	ELECT	4.7uF	20%	16V
		< FERRITE BEAD >			
FB303	1-500-445-21	FERRITE			

Ref. No.	Part No.	Description			Remark
		< IC >			
IC550	8-742-129-00	HYB SBX1971-51P			
		< RESISTOR >			
R570	1-216-045-00	METAL CHIP	680	5%	1/10W
R571	1-216-048-00	METAL CHIP	910	5%	1/10W
R572	1-216-051-00	METAL CHIP	1.2K	5%	1/10W
R573	1-216-056-00	RES,CHIP	2K	5%	1/10W
R574	1-216-061-00	METAL CHIP	3.3K	5%	1/10W
R575	1-216-069-00	METAL CHIP	6.8K	5%	1/10W
R579	1-216-085-00	METAL CHIP	33K	5%	1/10W
		< SWITCH >			
S572	1-692-014-11	SWITCH, KEY BOARD (OPERATE)			
S573	1-692-014-11	SWITCH, KEY BOARD (SLEEP)			
S574	1-692-014-11	SWITCH, KEY BOARD (STANDBY)			
S575	1-692-014-11	SWITCH, KEY BOARD (SYNCHRO REC CD ▶ MD)			
S576	1-692-014-11	SWITCH, KEY BOARD (REC IT TO END)			
S577	1-692-014-11	SWITCH, KEY BOARD (REC IT TO TOP)			
S578	1-692-014-11	SWITCH, KEY BOARD (REC)			
		CONTROL (R) BOARD			
		**********			
		< RESISTOR >			
R564	1-216-069-00	METAL CHIP	6.8K	5%	1/10W
R565	1-216-061-00	METAL CHIP	3.3K	5%	1/10W
R566	1-216-056-00	RES,CHIP	2K	5%	1/10W
R567	1-216-051-00	METAL CHIP	1.2K	5%	1/10W
R568	1-216-048-00	METAL CHIP	910	5%	1/10W
R569	1-216-045-00	METAL CHIP	680	5%	1/10W
		< SWITCH >			
S565	1-692-014-11	SWITCH, KEY BOARD (VOLUME +)			
S566	1-692-014-11	SWITCH, KEY BOARD (VOLUME –)			
S567	1-692-014-11	SWITCH, KEY BOARD (BASS/TREBLE)			
S568	1-692-014-11	SWITCH, KEY BOARD (MEGA BASS)			
S569	1-692-014-11	SWITCH, KEY BOARD (⏏ MD EJECT)			
S570	1-692-014-11	SWITCH, KEY BOARD (MONO/ST REPEAT)			
S571	1-692-014-11	SWITCH, KEY BOARD (AUTO PRESET/RDS SHUF/PGM)			
		JOG BOARD			
		**********			
		< CAPACITOR >			
C553	1-163-038-91	CERAMIC CHIP	0.1uF		25V
C554	1-163-038-91	CERAMIC CHIP	0.1uF		25V
		< SWITCH >			
S556	1-475-977-11	SWITCH, ROTARY (JOG DIAL , – ⏮, ⏭ +)			
**********					

Ref. No.	Part No.	Description			Remark
*	A-3321-849-A	CONTROL SW BOARD			
		**********			
		< CAPACITOR >			
C550	1-163-021-91	CERAMIC CHIP	0.01uF	10%	50V
C551	1-163-021-91	CERAMIC CHIP	0.01uF	10%	50V
C552	1-163-021-91	CERAMIC CHIP	0.01uF	10%	50V
		< CONNECTOR >			
CN550	1-691-067-31	HOUSING, CONNECTOR 8P			
		< DIODE >			
D550	8-719-047-57	LED SLA-362MT3F-A47 (MD)			
D551	8-719-047-57	LED SLA-362MT3F-A47 (CD)			
D552	8-719-047-57	LED SLA-362MT3F-A47 (RADIO)			
		< PILOT LAMP >			
PL550	1-517-848-11	LAMP, PILOT (CD LIGHT)			
		< TRANSISTOR >			
Q550	8-729-027-58	TRANSISTOR DTC143ZKA-T146			
Q551	8-729-027-58	TRANSISTOR DTC143ZKA-T146			
Q552	8-729-027-58	TRANSISTOR DTC143ZKA-T146			
		< RESISTOR >			
R550	1-216-029-00	METAL CHIP	150	5%	1/10W
R553	1-216-069-00	METAL CHIP	6.8K	5%	1/10W
R554	1-216-061-00	METAL CHIP	3.3K	5%	1/10W
R555	1-216-056-00	RES,CHIP	2K	5%	1/10W
R556	1-216-051-00	METAL CHIP	1.2K	5%	1/10W
R557	1-216-048-00	METAL CHIP	910	5%	1/10W
R578	1-216-194-00	METAL CHIP	680	5%	1/8W
		< SWITCH >			
S550	1-692-014-11	SWITCH, KEY BOARD (□)			
S551	1-692-014-11	SWITCH, KEY BOARD (▷II MD)			
S552	1-692-014-11	SWITCH, KEY BOARD (BAND RADIO)			
S553	1-692-014-11	SWITCH, KEY BOARD (▷II CD)			
S554	1-692-014-11	SWITCH, KEY BOARD (□)			
S555	1-692-014-11	SWITCH, KEY BOARD (⏏ CD OPEN/CLOSE)			
S579	1-692-014-11	SWITCH, KEY BOARD (LINE/LINE LEVEL)			
**********					
*	A-3323-164-A	DG BOARD, COMPLETE			
		**********			
		< CAPACITOR >			
C601	1-162-959-11	CERAMIC CHIP	330PF	5%	50V
C602	1-163-263-11	CERAMIC CHIP	330PF	5%	50V
C603	1-163-005-11	CERAMIC CHIP	470PF	10%	50V
C604	1-163-263-11	CERAMIC CHIP	330PF	5%	50V
C605	1-164-156-11	CERAMIC CHIP	0.1uF		25V
C606	1-162-927-11	CERAMIC CHIP	100PF	5%	50V
C607	1-162-927-11	CERAMIC CHIP	100PF	5%	50V
C608	1-162-916-11	CERAMIC CHIP	12PF	5%	50V
C609	1-162-916-11	CERAMIC CHIP	12PF	5%	50V
C610	1-164-156-11	CERAMIC CHIP	0.1uF		25V
C611	1-164-156-11	CERAMIC CHIP	0.1uF		25V
C612	1-164-156-11	CERAMIC CHIP	0.1uF		25V
C613	1-162-927-11	CERAMIC CHIP	100PF	5%	50V
C614	1-163-251-11	CERAMIC CHIP	100PF	5%	50V
C615	1-164-156-11	CERAMIC CHIP	0.1uF		25V
C616	1-164-156-11	CERAMIC CHIP	0.1uF		25V
C617	1-164-156-11	CERAMIC CHIP	0.1uF		25V
C618	1-109-994-11	CERAMIC CHIP	2.2uF	10%	10V
C619	1-126-207-11	ELECT CHIP	33uF	20%	4V
C620	1-107-823-11	CERAMIC CHIP	0.47uF	10%	16V
C621	1-162-970-11	CERAMIC CHIP	0.01uF	10%	25V
C622	1-164-156-11	CERAMIC CHIP	0.1uF		25V
C624	1-162-915-11	CERAMIC CHIP	10PF	0.5PF	50V
C625	1-162-915-11	CERAMIC CHIP	10PF	0.5PF	50V
C626	1-163-021-91	CERAMIC CHIP	0.01uF	10%	50V
C627	1-164-156-11	CERAMIC CHIP	0.1uF		25V
C628	1-126-205-11	ELECT CHIP	47uF	20%	6.3V
C629	1-126-205-11	ELECT CHIP	47uF	20%	6.3V
C632	1-126-603-11	ELECT CHIP	4.7uF	20%	35V
C633	1-126-603-11	ELECT CHIP	4.7uF	20%	35V
C634	1-162-970-11	CERAMIC CHIP	0.01uF	10%	25V
C635	1-126-205-11	ELECT CHIP	47uF	20%	6.3V
C636	1-163-227-11	CERAMIC CHIP	10PF	0.5PF	50V
C637	1-126-603-11	ELECT CHIP	4.7uF	20%	35V
C638	1-162-927-11	CERAMIC CHIP	100PF	5%	50V
C639	1-124-779-00	ELECT CHIP	10uF	20%	16V
C640	1-126-603-11	ELECT CHIP	4.7uF	20%	35V
C641	1-164-004-11	CERAMIC CHIP	0.1uF	10%	25V
C642	1-126-205-11	ELECT CHIP	47uF	20%	6.3V
C644	1-164-156-11	CERAMIC CHIP	0.1uF		25V
C645	1-164-156-11	CERAMIC CHIP	0.1uF		25V
C650	1-162-966-11	CERAMIC CHIP	0.0022uF	10%	50V
C651	1-162-966-11	CERAMIC CHIP	0.0022uF	10%	50V
C655	1-162-970-11	CERAMIC CHIP	0.01uF	10%	25V
C657	1-162-970-11	CERAMIC CHIP	0.01uF	10%	25V
C658	1-162-966-11	CERAMIC CHIP	0.0022uF	10%	50V
C659	1-163-021-91	CERAMIC CHIP	0.01uF	10%	50V
C660	1-126-205-11	ELECT CHIP	47uF	20%	6.3V
C661	1-162-966-11	CERAMIC CHIP	0.0022uF	10%	50V
C662	1-163-038-91	CERAMIC CHIP	0.1uF		25V
C666	1-162-923-11	CERAMIC CHIP	47PF	5%	50V
C668	1-163-038-91	CERAMIC CHIP	0.1uF		25V
C670	1-126-205-11	ELECT CHIP	47uF	20%	6.3V
C672	1-162-970-11	CERAMIC CHIP	0.01uF	10%	25V
C673	1-162-915-11	CERAMIC CHIP	10PF	0.5PF	50V
C674	1-162-970-11	CERAMIC CHIP	0.01uF	10%	25V
C675	1-163-251-11	CERAMIC CHIP	100PF	5%	50V
C676	1-163-251-11	CERAMIC CHIP	100PF	5%	50V
C680	1-162-915-11	CERAMIC CHIP	10PF	0.5PF	50V
		< CONNECTOR >			
CN601	1-785-371-21	CONNECTOR, FFC/FPC 29P			
CN602	1-785-372-11	CONNECTOR, FFC/FPC 19P			
* CN603	1-580-055-21	PIN, CONNECTOR (SMD) 2P			
* CN604	1-785-370-21	CONNECTOR, FFC/FPC 26P			
		< DIODE >			
D601	8-719-914-43	DIODE DAN202K			

DG

Ref. No.	Part No.	Description			Remark
D602	8-719-988-61	DIODE 1SS355TE-17			
		< FERRITE BEAD >			
FB601	1-500-445-21	FERRITE			
FB602	1-469-125-21	FERRITE			
FB603	1-469-125-21	FERRITE			
FB604	1-469-125-21	FERRITE			
FB605	1-469-125-21	FERRITE			
FB606	1-469-125-21	FERRITE			
FB607	1-500-445-21	FERRITE			
FB608	1-469-125-21	FERRITE			
FB609	1-469-125-21	FERRITE			
FB610	1-412-973-11	INDUCTOR	0.33uH		
FB611	1-500-445-21	FERRITE			
FB612	1-469-185-11	FERRITE			
FB613	1-500-445-21	FERRITE			
FB614	1-500-445-21	FERRITE			
FB615	1-500-445-21	FERRITE			
FB616	1-500-445-21	FERRITE			
FB617	1-500-445-21	FERRITE			
FB618	1-500-445-21	FERRITE			
FB619	1-500-445-21	FERRITE			
FB620	1-500-445-21	FERRITE			
FB621	1-500-445-21	FERRITE			
FB622	1-500-445-21	FERRITE			
FB623	1-500-445-21	FERRITE			
FB624	1-500-445-21	FERRITE			
FB625	1-500-445-21	FERRITE			
FB626	1-500-445-21	FERRITE			
FB627	1-216-295-00	METAL CHIP	0	5%	1/10W
FB628	1-500-445-21	FERRITE			
FB630	1-469-125-21	FERRITE			
FB631	1-500-445-21	FERRITE			
FB632	1-500-445-21	FERRITE			
FB633	1-469-185-11	FERRITE			
FB634	1-469-185-11	FERRITE			
FB636	1-500-445-21	FERRITE			
FB637	1-500-445-21	FERRITE			
FB638	1-500-445-21	FERRITE			
FB639	1-500-445-21	FERRITE			
FB640	1-500-445-21	FERRITE			
FB641	1-500-445-21	FERRITE			
FB642	1-500-445-21	FERRITE			
FB643	1-500-445-21	FERRITE			
FB644	1-500-445-21	FERRITE			
FB645	1-500-445-21	FERRITE			
FB646	1-500-445-21	FERRITE			
FB647	1-500-445-21	FERRITE			
FB648	1-500-445-21	FERRITE			
FB649	1-500-445-21	FERRITE			
FB650	1-469-125-21	FERRITE			
FB651	1-469-125-21	FERRITE			
FB652	1-216-295-00	METAL CHIP	0	5%	1/10W
FB653	1-216-295-00	METAL CHIP	0	5%	1/10W
FB654	1-500-445-21	FERRITE			
FB655	1-469-185-11	FERRITE			
FB656	1-469-185-11	FERRITE			
FB657	1-469-185-11	FERRITE			
FB658	1-500-445-21	FERRITE			
		< FILTER >			
FL601	1-239-901-21	FERRITE			
FL602	1-239-901-21	FERRITE			
FL603	1-239-899-21	FILTER, CHIP EMI			
FL604	1-239-899-21	FILTER, CHIP EMI			
FL605	1-239-899-21	FILTER, CHIP EMI			
FL606	1-239-899-21	FILTER, CHIP EMI			
* FL607	1-125-971-21	FILTER, 3 TERMINAL NOISE			
* FL608	1-125-971-21	FILTER, 3 TERMINAL NOISE			
* FL611	1-125-971-21	FILTER, 3 TERMINAL NOISE			
* FL612	1-125-971-21	FILTER, 3 TERMINAL NOISE			
* FL619	1-125-971-21	FILTER, 3 TERMINAL NOISE			
* FL620	1-125-971-21	FILTER, 3 TERMINAL NOISE			
		< IC >			
IC601	8-759-494-80	IC RU8X12MF-0021			
IC602	8-759-040-83	IC BA6287F			
IC603	8-759-561-36	IC PCM3003E/T2			
IC604	8-759-243-19	IC TC7SU04F			
IC605	8-759-096-87	IC TC7WU04FU(TE12R)			
		< JUMPER RESISTOR >			
JC601	1-216-049-91	RES,CHIP	1K	5%	1/10W
JC603	1-216-049-91	RES,CHIP	1K	5%	1/10W
JC604	1-216-295-00	METAL CHIP	0	5%	1/10W
JC605	1-216-295-00	METAL CHIP	0	5%	1/10W
JC606	1-216-296-00	METAL CHIP	0	5%	1/8W
JC607	1-216-295-00	METAL CHIP	0	5%	1/10W
JC608	1-216-295-00	METAL CHIP	0	5%	1/10W
JC609	1-216-864-11	METAL CHIP	0	5%	1/16W
JC610	1-216-864-11	METAL CHIP	0	5%	1/16W
JC611	1-216-864-11	METAL CHIP	0	5%	1/16W
JC612	1-216-864-11	METAL CHIP	0	5%	1/16W
JC613	1-216-295-00	METAL CHIP	0	5%	1/10W
JC614	1-216-296-00	METAL CHIP	0	5%	1/8W
JC615	1-216-295-00	METAL CHIP	0	5%	1/10W
JC616	1-216-295-00	METAL CHIP	0	5%	1/10W
JC617	1-216-295-00	METAL CHIP	0	5%	1/10W
JC618	1-216-295-00	METAL CHIP	0	5%	1/10W
JC619	1-216-295-00	METAL CHIP	0	5%	1/10W
JC620	1-216-295-00	METAL CHIP	0	5%	1/10W
JC621	1-216-295-00	METAL CHIP	0	5%	1/10W
JC622	1-216-295-00	METAL CHIP	0	5%	1/10W
JC623	1-216-295-00	METAL CHIP	0	5%	1/10W
JC624	1-216-295-00	METAL CHIP	0	5%	1/10W
		< COIL >			
L601	1-414-521-21	INDUCTOR CHIP	10uH		
L602	1-414-398-11	INDUCTOR	10uH		
L603	1-414-398-11	INDUCTOR	10uH		
L604	1-414-398-11	INDUCTOR	10uH		
L605	1-414-398-11	INDUCTOR	10uH		
L606	1-414-398-11	INDUCTOR	10uH		
L607	1-414-398-11	INDUCTOR	10uH		
L608	1-414-398-11	INDUCTOR	10uH		
L609	1-414-398-11	INDUCTOR	10uH		

Ref. No.	Part No.	Description			Remark
L610	1-414-398-11	INDUCTOR	10uH		
L611	1-416-107-21	INDUCTOR			
L612	1-414-398-11	INDUCTOR	10uH		
L613	1-414-398-11	INDUCTOR	10uH		
L614	1-414-398-11	INDUCTOR	10uH		
L615	1-500-445-21	FERRITE			
L616	1-500-445-21	FERRITE			
L617	1-500-445-21	FERRITE			
L618	1-500-445-21	FERRITE			
L619	1-414-398-11	INDUCTOR	10uH		
L620	1-414-398-11	INDUCTOR	10uH		
L621	1-414-521-21	INDUCTOR CHIP	10uH		
L622	1-414-521-21	INDUCTOR CHIP	10uH		
		< TRANSISTOR >			
Q601	8-729-031-43	TRANSISTOR	IMD9A-T108		
Q602	8-729-031-43	TRANSISTOR	IMD9A-T108		
Q603	8-729-402-84	TRANSISTOR	XN4601		
Q604	8-729-402-84	TRANSISTOR	XN4601		
Q605	8-729-031-43	TRANSISTOR	IMD9A-T108		
Q606	8-729-031-43	TRANSISTOR	IMD9A-T108		
Q607	8-729-031-43	TRANSISTOR	IMD9A-T108		
Q608	8-729-027-56	TRANSISTOR	DTC143TKA-T146		
Q609	8-729-031-43	TRANSISTOR	IMD9A-T108		
Q610	8-729-027-46	TRANSISTOR	DTC114YKA-T146		
Q611	8-729-031-43	TRANSISTOR	IMD9A-T108		
Q612	8-729-101-07	TRANSISTOR	2SB798-DL		
Q615	8-729-027-46	TRANSISTOR	DTC114YKA-T146		
Q616	8-729-027-46	TRANSISTOR	DTC114YKA-T146		
Q617	8-729-019-72	TRANSISTOR	2SB1260		
		< RESISTOR >			
R601	1-216-821-11	METAL CHIP	1K	5%	1/16W
R602	1-216-821-11	METAL CHIP	1K	5%	1/16W
R603	1-216-821-11	METAL CHIP	1K	5%	1/16W
R604	1-216-821-11	METAL CHIP	1K	5%	1/16W
R605	1-216-222-00	RES,CHIP	10K	5%	1/8W
R606	1-216-833-91	RES,CHIP	10K	5%	1/16W
R607	1-216-222-00	RES,CHIP	10K	5%	1/8W
R608	1-216-073-00	METAL CHIP	10K	5%	1/10W
R609	1-216-246-00	RES,CHIP	100K	5%	1/8W
R610	1-216-246-00	RES,CHIP	100K	5%	1/8W
R611	1-216-845-11	METAL CHIP	100K	5%	1/16W
R612	1-216-097-91	RES,CHIP	100K	5%	1/10W
R613	1-216-833-91	RES,CHIP	10K	5%	1/16W
R614	1-216-857-11	METAL CHIP	1M	5%	1/16W
R615	1-216-833-91	RES,CHIP	10K	5%	1/16W
R616	1-216-845-11	METAL CHIP	100K	5%	1/16W
R617	1-216-809-11	METAL CHIP	100	5%	1/16W
R618	1-216-809-11	METAL CHIP	100	5%	1/16W
R619	1-216-845-11	METAL CHIP	100K	5%	1/16W
R620	1-216-851-11	METAL CHIP	330K	5%	1/16W
R621	1-216-833-91	RES,CHIP	10K	5%	1/16W
R622	1-216-833-91	RES,CHIP	10K	5%	1/16W
R623	1-216-833-91	RES,CHIP	10K	5%	1/16W
R624	1-216-073-00	METAL CHIP	10K	5%	1/10W
R625	1-216-833-91	RES,CHIP	10K	5%	1/16W

Ref. No.	Part No.	Description			Remark
R626	1-216-073-00	METAL CHIP	10K	5%	1/10W
R627	1-216-841-11	METAL CHIP	47K	5%	1/16W
R628	1-216-089-91	RES,CHIP	47K	5%	1/10W
R629	1-216-833-91	RES,CHIP	10K	5%	1/16W
R630	1-216-833-91	RES,CHIP	10K	5%	1/16W
R631	1-216-821-11	METAL CHIP	1K	5%	1/16W
R632	1-216-821-11	METAL CHIP	1K	5%	1/16W
R633	1-216-833-91	RES,CHIP	10K	5%	1/16W
R634	1-216-833-91	RES,CHIP	10K	5%	1/16W
R635	1-216-833-91	RES,CHIP	10K	5%	1/16W
R636	1-216-851-11	METAL CHIP	330K	5%	1/16W
R637	1-216-829-11	METAL CHIP	4.7K	5%	1/16W
R638	1-216-841-11	METAL CHIP	47K	5%	1/16W
R639	1-216-847-11	METAL CHIP	150K	5%	1/16W
R640	1-216-821-11	METAL CHIP	1K	5%	1/16W
R641	1-216-843-11	METAL CHIP	68K	5%	1/16W
R642	1-216-833-91	RES,CHIP	10K	5%	1/16W
R643	1-216-807-11	METAL CHIP	68	5%	1/16W
R644	1-216-073-00	METAL CHIP	10K	5%	1/10W
R646	1-216-041-00	METAL CHIP	470	5%	1/10W
R647	1-216-089-91	RES,CHIP	47K	5%	1/10W
R648	1-216-073-00	METAL CHIP	10K	5%	1/10W
R649	1-216-835-11	METAL CHIP	15K	5%	1/16W
R650	1-216-833-91	RES,CHIP	10K	5%	1/16W
R651	1-216-077-00	METAL CHIP	15K	5%	1/10W
R652	1-216-819-11	METAL CHIP	680	5%	1/16W
R653	1-216-073-00	METAL CHIP	10K	5%	1/10W
R654	1-216-073-00	METAL CHIP	10K	5%	1/10W
R655	1-216-073-00	METAL CHIP	10K	5%	1/10W
R656	1-216-073-00	METAL CHIP	10K	5%	1/10W
R657	1-216-841-11	METAL CHIP	47K	5%	1/16W
R658	1-216-853-11	METAL CHIP	470K	5%	1/16W
R659	1-216-817-11	METAL CHIP	470	5%	1/16W
R660	1-216-089-91	RES,CHIP	47K	5%	1/10W
R661	1-216-857-11	METAL CHIP	1M	5%	1/16W
R662	1-216-819-11	METAL CHIP	680	5%	1/16W
R663	1-216-821-11	METAL CHIP	1K	5%	1/16W
R664	1-216-821-11	METAL CHIP	1K	5%	1/16W
R665	1-216-073-00	METAL CHIP	10K	5%	1/10W
R666	1-216-821-11	METAL CHIP	1K	5%	1/16W
R667	1-216-821-11	METAL CHIP	1K	5%	1/16W
R668	1-216-033-00	METAL CHIP	220	5%	1/10W
R669	1-216-857-11	METAL CHIP	1M	5%	1/16W
R671	1-216-049-91	RES,CHIP	1K	5%	1/10W
R672	1-216-049-91	RES,CHIP	1K	5%	1/10W
		< VIBRATOR >			
X601	1-760-174-11	VIBRATOR, CERAMIC (12MHz)			
X602	1-781-183-11	VIBRATOR, CRYSTAL (32.768kHz)			
X603	1-767-151-11	VIBRATOR, CRYSTAL (22.5792MHz)			
**********					
*	1-671-317-21	LCD BOARD			
		**********			
*	3-027-672-01	HOLDER, LCD			
	3-030-437-01	ILLUMINATOR			
*	3-031-123-01	COVER, LCD			
	4-931-757-31	SCREW(DIA.2.6X8)(IT3B),TAPPING			

LCD **LINE** **MAIN**

Ref. No.	Part No.	Description			Remark
		< CAPACITOR >			
C559	1-163-009-11	CERAMIC CHIP	0.001uF	10%	50V
C560	1-163-009-11	CERAMIC CHIP	0.001uF	10%	50V
C561	1-163-251-11	CERAMIC CHIP	100PF	5%	50V
C562	1-163-251-11	CERAMIC CHIP	100PF	5%	50V
C563	1-163-038-91	CERAMIC CHIP	0.1uF		25V
C564	1-163-009-11	CERAMIC CHIP	0.001uF	10%	50V
C565	1-109-982-11	CERAMIC	1MF	10%	10V
C566	1-109-982-11	CERAMIC	1MF	10%	10V
C567	1-109-982-11	CERAMIC	1MF	10%	10V
C568	1-109-982-11	CERAMIC	1MF	10%	10V
C569	1-109-982-11	CERAMIC	1MF	10%	10V
C570	1-107-823-11	CERAMIC CHIP	0.47uF	10%	16V
C571	1-107-823-11	CERAMIC CHIP	0.47uF	10%	16V
C572	1-107-823-11	CERAMIC CHIP	0.47uF	10%	16V
C573	1-104-665-11	ELECT	100uF	20%	10V
		< CONNECTOR >			
CN552	1-691-068-21	HOUSING, CONNECTOR 9P			
CN553	1-563-624-11	HOUSING, CONNECTOR 21P			
		< JUMPER RESISTOR >			
JC556	1-216-295-00	METAL CHIP	0	5%	1/10W
		< LIQUID CRYSTAL DISPLAY >			
LCD1	1-803-283-11	LCD UNIT			
		< RESISTOR >			
R576	1-216-114-00	RES,CHIP	510K	5%	1/10W
R577	1-216-111-00	METAL CHIP	390K	5%	1/10W
R580	1-216-073-00	METAL CHIP	10K	5%	1/10W
R581	1-216-049-91	RES,CHIP	1K	5%	1/10W
R582	1-216-049-91	RES,CHIP	1K	5%	1/10W
R583	1-216-049-91	RES,CHIP	1K	5%	1/10W
R584	1-216-049-91	RES,CHIP	1K	5%	1/10W
		< VARIABLE RESISTOR >			
RV550	1-238-552-11	RES, ADJ, CARBON 470K (DIMMER)			
**********					
*	1-671-318-21	LINE BOARD			
		**********			
		< CONNECTOR >			
CN314	1-785-712-11	CONNECTOR, BOARD TO BOARD 4P			
		< DIODE >			
D308	8-719-988-61	DIODE 1SS355TE-17			
D309	8-719-988-61	DIODE 1SS355TE-17			
		< FERRITE BEAD >			
FB102	1-500-241-21	FERRITE			
FB202	1-500-241-21	FERRITE			
FB302	1-500-241-21	FERRITE			
		< JACK >			
J302	1-785-369-11	JACK (LINE IN)			
**********					

Ref. No.	Part No.	Description			Remark
*	A-3323-157-A	MAIN BOARD, COMPLETE			
		**********			
	7-685-646-79	SCREW +BVTP	3X8	TYPE2 N-S	
		< CAPACITOR >			
C101	1-126-961-11	ELECT	2.2uF	20%	50V
C102	1-126-961-11	ELECT	2.2uF	20%	50V
C103	1-126-961-11	ELECT	2.2uF	20%	50V
C104	1-126-964-11	ELECT	10uF	20%	50V
C105	1-164-172-11	CERAMIC CHIP	0.0056uF	10%	25V
C106	1-162-979-11	CERAMIC CHIP	0.0027uF	10%	50V
C107	1-124-233-11	ELECT	10uF	20%	16V
C108	1-126-964-11	ELECT	10uF	20%	50V
C109	1-162-970-11	CERAMIC CHIP	0.01uF	10%	25V
C110	1-162-957-11	CERAMIC CHIP	220PF	5%	50V
C111	1-104-665-11	ELECT	100uF	20%	10V
C112	1-126-964-11	ELECT	10uF	20%	50V
C113	1-126-964-11	ELECT	10uF	20%	50V
C114	1-124-257-00	ELECT	2.2uF	20%	50V
C127	1-162-957-11	CERAMIC CHIP	220PF	5%	50V
C201	1-126-961-11	ELECT	2.2uF	20%	50V
C202	1-126-961-11	ELECT	2.2uF	20%	50V
C203	1-126-961-11	ELECT	2.2uF	20%	50V
C204	1-126-964-11	ELECT	10uF	20%	50V
C205	1-164-172-11	CERAMIC CHIP	0.0056uF	10%	25V
C206	1-162-979-11	CERAMIC CHIP	0.0027uF	10%	50V
C207	1-126-964-11	ELECT	10uF	20%	50V
C208	1-126-964-11	ELECT	10uF	20%	50V
C209	1-162-970-11	CERAMIC CHIP	0.01uF	10%	25V
C210	1-162-957-11	CERAMIC CHIP	220PF	5%	50V
C211	1-104-665-11	ELECT	100uF	20%	10V
C212	1-126-964-11	ELECT	10uF	20%	50V
C213	1-126-964-11	ELECT	10uF	20%	50V
C214	1-126-961-11	ELECT	2.2uF	20%	50V
C227	1-162-957-11	CERAMIC CHIP	220PF	5%	50V
C301	1-164-004-11	CERAMIC CHIP	0.1uF	10%	25V
C302	1-124-584-00	ELECT	100uF	20%	10V
C303	1-104-665-11	ELECT	100uF	20%	10V
C321	1-104-665-11	ELECT	100uF	20%	10V
C327	1-104-665-11	ELECT	100uF	20%	10V
C328	1-164-004-11	CERAMIC CHIP	0.1uF	10%	25V
C329	1-163-021-91	CERAMIC CHIP	0.01uF	10%	50V
C331	1-104-665-11	ELECT	100uF	20%	10V
C340	1-124-233-11	ELECT	10uF	20%	16V
C341	1-124-233-11	ELECT	10uF	20%	16V
C342	1-124-233-11	ELECT	10uF	20%	16V
C401	1-117-850-11	ELECT	15000uF	20%	16V
C402	1-163-021-91	CERAMIC CHIP	0.01uF	10%	50V
C403	1-126-964-11	ELECT	10uF	20%	50V
C404	1-163-021-91	CERAMIC CHIP	0.01uF	10%	50V
C405	1-104-905-11	CAPACITOR	0.22F		5.5V
C406	1-163-059-91	CERAMIC CHIP	0.01uF	10%	50V
C407	1-126-157-11	ELECT	10uF	20%	16V
C408	1-126-157-11	ELECT	10uF	20%	16V
C409	1-163-021-91	CERAMIC CHIP	0.01uF	10%	50V
C410	1-126-935-11	ELECT	470uF	20%	16V
C411	1-163-021-91	CERAMIC CHIP	0.01uF	10%	50V

Ref. No.	Part No.	Description			Remark
C412	1-126-925-11	ELECT	470uF	20%	10V
C413	1-162-970-11	CERAMIC CHIP	0.01uF	10%	25V
C414	1-124-589-11	ELECT	47uF	20%	16V
C415	1-126-964-11	ELECT	10uF	20%	50V
C416	1-126-964-11	ELECT	10uF	20%	50V
C417	1-163-021-91	CERAMIC CHIP	0.01uF	10%	50V
C418	1-124-589-11	ELECT	47uF	20%	16V
C419	1-163-021-91	CERAMIC CHIP	0.01uF	10%	50V
C420	1-162-964-11	CERAMIC CHIP	0.001uF	10%	50V
C421	1-163-009-11	CERAMIC CHIP	0.001uF	10%	50V
C422	1-163-239-11	CERAMIC CHIP	33PF	5%	50V
C423	1-164-378-11	CERAMIC CHIP	30PF	5%	50V
C424	1-162-964-11	CERAMIC CHIP	0.001uF	10%	50V
C425	1-162-920-11	CERAMIC CHIP	27PF	5%	50V
C426	1-162-921-11	CERAMIC CHIP	33PF	5%	50V
C427	1-162-919-11	CERAMIC CHIP	22PF	5%	50V
C428	1-162-919-11	CERAMIC CHIP	22PF	5%	50V
C429	1-107-725-11	CERAMIC CHIP	0.1uF	10%	16V
C430	1-164-505-11	CERAMIC CHIP	2.2uF		16V
C431	1-124-584-00	ELECT	100uF	20%	10V
C432	1-163-021-91	CERAMIC CHIP	0.01uF	10%	50V
C433	1-162-964-11	CERAMIC CHIP	0.001uF	10%	50V
C434	1-162-964-11	CERAMIC CHIP	0.001uF	10%	50V
C435	1-162-964-11	CERAMIC CHIP	0.001uF	10%	50V
C436	1-162-964-11	CERAMIC CHIP	0.001uF	10%	50V
C437	1-162-964-11	CERAMIC CHIP	0.001uF	10%	50V
C438	1-162-964-11	CERAMIC CHIP	0.001uF	10%	50V
C439	1-162-964-11	CERAMIC CHIP	0.001uF	10%	50V
C440	1-162-970-11	CERAMIC CHIP	0.01uF	10%	25V
C441	1-162-970-11	CERAMIC CHIP	0.01uF	10%	25V
C442	1-162-964-11	CERAMIC CHIP	0.001uF	10%	50V
C443	1-162-964-11	CERAMIC CHIP	0.001uF	10%	50V
C444	1-162-964-11	CERAMIC CHIP	0.001uF	10%	50V
C445	1-162-964-11	CERAMIC CHIP	0.001uF	10%	50V
C446	1-162-964-11	CERAMIC CHIP	0.001uF	10%	50V
C447	1-162-964-11	CERAMIC CHIP	0.001uF	10%	50V
C448	1-162-970-11	CERAMIC CHIP	0.01uF	10%	25V
C449	1-162-964-11	CERAMIC CHIP	0.001uF	10%	50V
C450	1-162-964-11	CERAMIC CHIP	0.001uF	10%	50V
C451	1-162-970-11	CERAMIC CHIP	0.01uF	10%	25V
C452	1-162-970-11	CERAMIC CHIP	0.01uF	10%	25V
C453	1-162-970-11	CERAMIC CHIP	0.01uF	10%	25V
C455	1-162-964-11	CERAMIC CHIP	0.001uF	10%	50V
C456	1-162-964-11	CERAMIC CHIP	0.001uF	10%	50V
C457	1-162-927-11	CERAMIC CHIP	100PF	5%	50V
C458	1-163-251-11	CERAMIC CHIP	100PF	5%	50V
C459	1-162-964-11	CERAMIC CHIP	0.001uF	10%	50V
C460	1-162-964-11	CERAMIC CHIP	0.001uF	10%	50V
C461	1-162-964-11	CERAMIC CHIP	0.001uF	10%	50V
C462	1-162-964-11	CERAMIC CHIP	0.001uF	10%	50V
C463	1-162-964-11	CERAMIC CHIP	0.001uF	10%	50V
C464	1-162-964-11	CERAMIC CHIP	0.001uF	10%	50V
C465	1-162-964-11	CERAMIC CHIP	0.001uF	10%	50V
C466	1-164-315-11	CERAMIC CHIP	470PF	5%	50V
C467	1-162-964-11	CERAMIC CHIP	0.001uF	10%	50V
C468	1-163-009-11	CERAMIC CHIP	0.001uF	10%	50V
C469	1-163-009-11	CERAMIC CHIP	0.001uF	10%	50V
C470	1-162-964-11	CERAMIC CHIP	0.001uF	10%	50V
C471	1-162-927-11	CERAMIC CHIP	100PF	5%	50V
C472	1-162-927-11	CERAMIC CHIP	100PF	5%	50V
C473	1-162-927-11	CERAMIC CHIP	100PF	5%	50V
C475	1-162-964-11	CERAMIC CHIP	0.001uF	10%	50V
C476	1-162-927-11	CERAMIC CHIP	100PF	5%	50V
C477	1-162-964-11	CERAMIC CHIP	0.001uF	10%	50V
C478	1-162-964-11	CERAMIC CHIP	0.001uF	10%	50V
C479	1-162-923-11	CERAMIC CHIP	47PF	5%	50V
C480	1-162-964-11	CERAMIC CHIP	0.001uF	10%	50V
C483	1-163-009-11	CERAMIC CHIP	0.001uF	10%	50V
C484	1-162-964-11	CERAMIC CHIP	0.001uF	10%	50V
C485	1-162-964-11	CERAMIC CHIP	0.001uF	10%	50V
C486	1-164-315-11	CERAMIC CHIP	470PF	5%	50V
C487	1-164-315-11	CERAMIC CHIP	470PF	5%	50V
C488	1-162-964-11	CERAMIC CHIP	0.001uF	10%	50V
C489	1-162-964-11	CERAMIC CHIP	0.001uF	10%	50V
C490	1-162-964-11	CERAMIC CHIP	0.001uF	10%	50V
C491	1-162-964-11	CERAMIC CHIP	0.001uF	10%	50V
C492	1-126-961-11	ELECT	2.2uF	20%	50V
C493	1-163-235-11	CERAMIC CHIP	22PF	5%	50V
C494	1-163-263-11	CERAMIC CHIP	330PF	5%	50V
C495	1-163-233-11	CERAMIC CHIP	18PF	5%	50V
C496	1-128-551-11	ELECT	22uF	20%	25V
C497	1-163-021-91	CERAMIC CHIP	0.01uF	10%	50V
C498	1-163-021-91	CERAMIC CHIP	0.01uF	10%	50V
C499	1-126-935-11	ELECT	470uF	20%	6.3V
C500	1-163-135-00	CERAMIC CHIP	560PF	5%	50V
C501	1-162-970-11	CERAMIC CHIP	0.01uF	10%	25V
C502	1-162-970-11	CERAMIC CHIP	0.01uF	10%	25V
C503	1-162-970-11	CERAMIC CHIP	0.01uF	10%	25V
C504	1-162-970-11	CERAMIC CHIP	0.01uF	10%	25V
C505	1-162-964-11	CERAMIC CHIP	0.001uF	10%	50V
C506	1-162-964-11	CERAMIC CHIP	0.001uF	10%	50V
C507	1-162-970-11	CERAMIC CHIP	0.01uF	10%	25V
C508	1-162-964-11	CERAMIC CHIP	0.001uF	10%	50V
C510	1-163-009-11	CERAMIC CHIP	0.001uF	10%	50V
C511	1-163-009-11	CERAMIC CHIP	0.001uF	10%	50V
C512	1-163-009-11	CERAMIC CHIP	0.001uF	10%	50V
C513	1-162-964-11	CERAMIC CHIP	0.001uF	10%	50V
C514	1-163-009-11	CERAMIC CHIP	0.001uF	10%	50V
C515	1-163-021-91	CERAMIC CHIP	0.01uF	10%	50V
C516	1-163-009-11	CERAMIC CHIP	0.001uF	10%	50V
C517	1-163-021-91	CERAMIC CHIP	0.01uF	10%	50V
C518	1-163-021-91	CERAMIC CHIP	0.01uF	10%	50V
C519	1-163-021-91	CERAMIC CHIP	0.01uF	10%	50V
C520	1-162-964-11	CERAMIC CHIP	0.001uF	10%	50V
C521	1-164-505-11	CERAMIC CHIP	2.2uF		16V
C522	1-109-982-11	CERAMIC CHIP	1uF	10%	10V
C524	1-126-934-11	ELECT	220uF	20%	10V
C701	1-124-584-00	ELECT	100uF	20%	10V
C702	1-163-021-91	CERAMIC CHIP	0.01uF	10%	50V
C703	1-163-009-11	CERAMIC CHIP	0.001uF	10%	50V
C704	1-165-176-11	CERAMIC CHIP	0.047uF	10%	16V
C705	1-162-968-11	CERAMIC CHIP	0.0047uF	10%	50V
C706	1-162-970-11	CERAMIC CHIP	0.01uF	10%	25V
C707	1-126-925-11	ELECT	470uF	20%	10V
C708	1-107-826-91	CERAMIC CHIP	0.1uF	10%	16V
C709	1-162-969-11	CERAMIC CHIP	0.0068uF	10%	25V

MAIN

Ref. No.	Part No.	Description			Remark
C710	1-107-826-91	CERAMIC CHIP	0.1uF	10%	16V
C711	1-107-826-91	CERAMIC CHIP	0.1uF	10%	16V
C712	1-115-467-11	CERAMIC CHIP	0.22uF	10%	10V
C713	1-124-584-00	ELECT	100uF	20%	10V
C714	1-162-966-11	CERAMIC CHIP	0.0022uF	10%	50V
C715	1-107-826-91	CERAMIC CHIP	0.1uF	10%	16V
C716	1-126-157-11	ELECT	10uF	20%	16V
C717	1-107-826-91	CERAMIC CHIP	0.1uF	10%	16V
C718	1-107-826-91	CERAMIC CHIP	0.1uF	10%	16V
C720	1-119-660-11	TANTAL. CHIP	4.7uF	20%	6.3V
C721	1-162-970-11	CERAMIC CHIP	0.01uF	10%	25V
C722	1-164-677-11	CERAMIC CHIP	0.033uF	10%	16V
C723	1-164-677-11	CERAMIC CHIP	0.033uF	10%	16V
C724	1-162-915-11	CERAMIC CHIP	10PF	0.5PF	50V
C725	1-164-315-11	CERAMIC CHIP	470PF	5%	50V
C726	1-104-509-11	CERAMIC CHIP	0.018uF	10%	16V
C727	1-107-826-91	CERAMIC CHIP	0.1uF	10%	16V
C728	1-162-915-11	CERAMIC CHIP	10PF	0.5PF	50V
C729	1-162-969-11	CERAMIC CHIP	0.0068uF	10%	25V
C730	1-124-257-00	ELECT	2.2uF	20%	50V
C731	1-110-563-11	CERAMIC CHIP	0.068uF	10%	16V
C732	1-162-970-11	CERAMIC CHIP	0.01uF	10%	25V
C733	1-162-923-11	CERAMIC CHIP	47PF	5%	50V
C734	1-162-970-11	CERAMIC CHIP	0.01uF	10%	25V
C735	1-162-970-11	CERAMIC CHIP	0.01uF	10%	25V
C736	1-126-382-11	ELECT	100uF	20%	10V
C737	1-163-251-11	CERAMIC CHIP	100PF	5%	50V
C738	1-163-251-11	CERAMIC CHIP	100PF	5%	50V
C739	1-163-251-11	CERAMIC CHIP	100PF	5%	50V
C740	1-163-021-91	CERAMIC CHIP	0.01uF	10%	50V
C745	1-162-965-11	CERAMIC CHIP	0.0015uF	10%	50V
C746	1-162-957-11	CERAMIC CHIP	220PF	5%	50V
C747	1-164-489-11	CERAMIC CHIP	0.22uF	10%	16V
C748	1-165-176-11	CERAMIC CHIP	0.047uF	10%	16V
C749	1-162-970-11	CERAMIC CHIP	0.01uF	10%	25V
C750	1-163-021-91	CERAMIC CHIP	0.01uF	10%	50V
C751	1-163-021-91	CERAMIC CHIP	0.01uF	10%	50V
C752	1-162-970-11	CERAMIC CHIP	0.01uF	10%	25V
C753	1-162-970-11	CERAMIC CHIP	0.01uF	10%	25V
C755	1-163-251-11	CERAMIC CHIP	100PF	5%	50V
C756	1-163-263-11	CERAMIC CHIP	330PF	5%	50V
C757	1-162-970-11	CERAMIC CHIP	0.01uF	10%	25V
C758	1-163-251-11	CERAMIC CHIP	100PF	5%	50V
C759	1-162-970-11	CERAMIC CHIP	0.01uF	10%	25V
C760	1-163-251-11	CERAMIC CHIP	100PF	5%	50V
C761	1-163-251-11	CERAMIC CHIP	100PF	5%	50V
C762	1-107-682-11	CERAMIC CHIP	1uF	10%	16V
C763	1-163-251-11	CERAMIC CHIP	100PF	5%	50V
C764	1-162-970-11	CERAMIC CHIP	0.01uF	10%	25V
C765	1-162-970-11	CERAMIC CHIP	0.01uF	10%	25V
C767	1-163-229-11	CERAMIC CHIP	12PF	5%	50V
C768	1-163-229-11	CERAMIC CHIP	12PF	5%	50V
C770	1-124-584-00	ELECT	100uF	20%	10V
C771	1-124-584-00	ELECT	100uF	20%	10V
C773	1-124-233-11	ELECT	10uF	20%	16V
C774	1-124-233-11	ELECT	10uF	20%	16V
C775	1-163-021-91	CERAMIC CHIP	0.01uF	10%	50V
C776	1-127-688-21	TANTAL. CHIP	10uF	20%	6.3V
C777	1-126-382-11	ELECT	100uF	20%	10V
C778	1-162-970-11	CERAMIC CHIP	0.01uF	10%	25V
C779	1-162-927-11	CERAMIC CHIP	100PF	5%	50V
C780	1-162-957-11	CERAMIC CHIP	220PF	5%	50V
C781	1-162-970-11	CERAMIC CHIP	0.01uF	10%	25V
C783	1-109-982-11	CERAMIC CHIP	1uF	10%	10V
C784	1-163-021-91	CERAMIC CHIP	0.01uF	10%	50V
C787	1-163-021-91	CERAMIC CHIP	0.01uF	10%	50V
C788	1-126-176-11	ELECT	220uF	20%	10V
C790	1-162-927-11	CERAMIC CHIP	100PF	5%	50V
C791	1-109-982-11	CERAMIC CHIP	1uF	10%	10V
		< CONNECTOR >			
* CN305	1-580-171-11	PIN, CONNECTOR (PC BOARD) 10P			
* CN306	1-580-169-11	PIN, CONNECTOR (PC BOARD) 8P			
CN307	1-785-713-11	CONNECTOR, BOARD TO BOARD 4P			
* CN312	1-564-509-11	PLUG, CONNECTOR 6P			
* CN313	1-564-520-11	PLUG, CONNECTOR 5P			
* CN401	1-564-519-11	PLUG, CONNECTOR 4P			
CN402	1-580-168-01	PIN, CONNECTOR (PC BOARD) 7P			
CN404	1-580-168-11	PIN, CONNECTOR (PC BOARD) 7P			
CN405	1-770-533-31	CONNECTOR, FFC/FPC 26P			
CN406	1-568-852-11	CONNECTOR, FFC/FPC 9P			
CN407	1-569-906-11	SOCKET, CONNECTOR 11P			
CN408	1-580-168-11	PIN, CONNECTOR (PC BOARD) 7P			
CN409	1-770-516-31	CONNECTOR, FFC/FPC 8P			
* CN701	1-779-466-11	CONNECTOR, FFC/FPC 16P			
* CN702	1-580-167-11	PIN, CONNECTOR (PC BOARD) 6P			
* CN704	1-580-163-11	PIN, CONNECTOR (PC BOARD) 2P			
		< DIODE >			
D401	8-719-914-43	DIODE DAN202K			
D402	8-719-056-83	DIODE UDZ-TE-17-6.8B			
D405	8-719-988-61	DIODE 1SS355TE-17			
D406	8-719-988-61	DIODE 1SS355TE-17			
D407	8-719-988-61	DIODE 1SS355TE-17			
D701	8-719-988-61	DIODE 1SS355TE-17			
D702	8-719-988-61	DIODE 1SS355TE-17			
D703	8-719-056-76	DIODE UDZ-TE-17-3.6B			
D704	8-719-988-61	DIODE 1SS355TE-17			
		< FERRITE BEAD >			
FB101	1-216-295-00	METAL CHIP	0	5%	1/10W
FB201	1-216-295-00	METAL CHIP	0	5%	1/10W
FB301	1-216-295-00	METAL CHIP	0	5%	1/10W
FB401	1-216-296-00	METAL CHIP	0	5%	1/8W
FB402	1-469-125-21	FERRITE			
FB403	1-500-445-21	FERRITE			
FB404	1-469-125-21	FERRITE			
FB405	1-500-445-21	FERRITE			
FB406	1-500-445-21	FERRITE			
FB407	1-469-125-21	FERRITE			
FB408	1-500-445-21	FERRITE			
FB409	1-469-125-21	FERRITE			
FB410	1-469-125-21	FERRITE			
FB411	1-500-445-21	FERRITE			
FB412	1-469-185-11	FERRITE			

Ref. No.	Part No.	Description			Remark
FB413	1-469-185-11	FERRITE			
FB414	1-500-445-21	FERRITE			
FB415	1-500-445-21	FERRITE			
FB416	1-216-295-00	METAL CHIP	0	5%	1/10W
FB417	1-469-125-21	FERRITE			
FB418	1-469-125-21	FERRITE			
FB419	1-469-125-21	FERRITE			
FB420	1-469-125-21	FERRITE			
FB421	1-469-125-21	FERRITE			
FB422	1-469-125-21	FERRITE			
FB423	1-216-295-00	METAL CHIP	0	5%	1/10W
FB424	1-500-445-21	FERRITE			
FB425	1-216-295-00	METAL CHIP	0	5%	1/10W
FB426	1-216-864-11	METAL CHIP	0	5%	1/16W
FB427	1-216-295-00	METAL CHIP	0	5%	1/10W
FB428	1-216-295-00	METAL CHIP	0	5%	1/10W
FB429	1-216-295-00	METAL CHIP	0	5%	1/10W
FB430	1-216-295-00	METAL CHIP	0	5%	1/10W
FB431	1-216-295-00	METAL CHIP	0	5%	1/10W
FB432	1-216-864-11	METAL CHIP	0	5%	1/16W
FB433	1-216-295-00	METAL CHIP	0	5%	1/10W
FB434	1-216-864-11	METAL CHIP	0	5%	1/16W
FB701	1-216-864-11	METAL CHIP	0	5%	1/16W
FB703	1-500-234-22	FERRITE			
FB704	1-216-295-00	METAL CHIP	0	5%	1/10W
FB711	1-500-241-22	FERRITE			
FB712	1-216-295-00	METAL CHIP	0	5%	1/10W
FB713	1-216-295-00	METAL CHIP	0	5%	1/10W
FB714	1-216-295-00	METAL CHIP	0	5%	1/10W
FB762	1-216-864-11	METAL CHIP	0	5%	1/16W
		< IC >			
IC301	8-759-287-76	IC NJM2123M-T1			
IC302	8-759-636-55	IC M5218AFP			
IC401	8-759-361-69	IC BA17805T			
IC402	8-759-486-73	IC XC62FP3302PR			
IC403	8-759-493-53	IC S-81233SGUP-DQF-T1			
IC404	8-759-572-25	IC XC61AN2702PR			
IC405	8-752-903-56	IC CXP740096-026Q			
IC406	8-759-557-36	IC BU1924F-E2			
IC701	8-752-083-24	IC CXA2542AQ			
IC702	8-752-387-78	IC CXD3009Q			
IC703	8-759-591-63	IC BA6998FP-E2			
		< JACK >			
J301	1-785-368-11	JACK (🎧)			
		< JUMPER RESISTOR >			
JC404	1-216-296-00	METAL CHIP	0	5%	1/8W
JC405	1-216-296-00	METAL CHIP	0	5%	1/8W
JC406	1-216-296-00	METAL CHIP	0	5%	1/8W
JC407	1-216-295-00	METAL CHIP	0	5%	1/10W
		< COIL >			
L301	1-410-993-42	INDUCTOR CHIP	1uH		
L302	1-410-993-42	INDUCTOR CHIP	1uH		
L303	1-410-993-42	INDUCTOR CHIP	1uH		
L401	1-414-170-21	INDUCTOR CHIP	100uH		

Ref. No.	Part No.	Description			Remark
L701	1-412-973-11	INDUCTOR	0.33uH		
		< TRANSISTOR >			
Q101	8-729-920-31	TRANSISTOR	DTC343TK		
Q102	8-729-920-31	TRANSISTOR	DTC343TK		
Q103	8-729-920-31	TRANSISTOR	DTC343TK		
Q104	8-729-903-10	TRANSISTOR	FMW1		
Q106	8-729-920-31	TRANSISTOR	DTC343TK		
Q107	8-729-027-46	TRANSISTOR	DTC114YKA-T146		
Q201	8-729-920-31	TRANSISTOR	DTC343TK		
Q202	8-729-920-31	TRANSISTOR	DTC343TK		
Q203	8-729-920-31	TRANSISTOR	DTC343TK		
Q204	8-729-903-10	TRANSISTOR	FMW1		
Q206	8-729-920-31	TRANSISTOR	DTC343TK		
Q207	8-729-027-46	TRANSISTOR	DTC114YKA-T146		
Q301	8-729-920-41	TRANSISTOR	FMC3		
Q302	8-729-920-41	TRANSISTOR	FMC3		
Q303	8-729-920-41	TRANSISTOR	FMC3		
Q304	8-729-027-24	TRANSISTOR	DTA114TKA-T146		
Q305	8-729-027-24	TRANSISTOR	DTA114TKA-T146		
Q306	8-729-027-24	TRANSISTOR	DTA114TKA-T146		
Q311	8-729-920-41	TRANSISTOR	FMC3		
Q312	8-729-920-41	TRANSISTOR	FMC3		
Q401	8-729-920-41	TRANSISTOR	FMC3		
Q402	8-729-922-62	TRANSISTOR	2SD1760F5-TLQ		
Q403	8-729-920-41	TRANSISTOR	FMC3		
Q404	8-729-027-46	TRANSISTOR	DTC114YKA-T146		
Q405	8-729-903-46	TRANSISTOR	2SB1132-P		
Q406	8-729-903-10	TRANSISTOR	FMW1		
Q407	8-729-027-46	TRANSISTOR	DTC114YKA-T146		
Q408	8-729-027-46	TRANSISTOR	DTC114YKA-T146		
Q409	8-729-027-26	TRANSISTOR	DTA114YKA-T146		
Q410	8-729-903-46	TRANSISTOR	2SB1132-P		
Q411	8-729-027-46	TRANSISTOR	DTC114YKA-T146		
Q412	8-729-027-46	TRANSISTOR	DTC114YKA-T146		
Q413	8-729-903-46	TRANSISTOR	2SB1132-P		
Q701	8-729-101-07	TRANSISTOR	2SB798-DL		
Q702	8-729-027-29	TRANSISTOR	DTA123JKA-T146		
Q703	8-729-922-62	TRANSISTOR	2SD1760F5-TLQ		
		< RESISTOR >			
R101	1-216-845-11	METAL CHIP	100K	5%	1/16W
R102	1-216-097-91	RES,CHIP	100K	5%	1/10W
R103	1-216-845-11	METAL CHIP	100K	5%	1/16W
R104	1-216-864-11	METAL CHIP	0	5%	1/16W
R105	1-216-821-11	METAL CHIP	1K	5%	1/16W
R106	1-216-845-11	METAL CHIP	100K	5%	1/16W
R107	1-216-864-11	METAL CHIP	0	5%	1/16W
R108	1-216-821-11	METAL CHIP	1K	5%	1/16W
R109	1-216-230-00	RES,CHIP	22K	5%	1/8W
R110	1-216-821-11	METAL CHIP	1K	5%	1/16W
R111	1-216-025-91	RES,CHIP	100	5%	1/10W
R112	1-216-821-11	METAL CHIP	1K	5%	1/16W
R113	1-216-081-00	METAL CHIP	22K	5%	1/10W
R114	1-216-845-11	METAL CHIP	100K	5%	1/16W
R115	1-216-825-11	METAL CHIP	2.2K	5%	1/16W
R116	1-216-833-91	RES,CHIP	10K	5%	1/16W

MAIN

Ref. No.	Part No.	Description			Remark
R117	1-216-073-00	METAL CHIP	10K	5%	1/10W
R118	1-216-073-00	METAL CHIP	10K	5%	1/10W
R119	1-216-821-11	METAL CHIP	1K	5%	1/16W
R120	1-216-081-00	METAL CHIP	22K	5%	1/10W
R121	1-216-825-11	METAL CHIP	2.2K	5%	1/16W
R122	1-216-081-00	METAL CHIP	22K	5%	1/10W
R123	1-216-097-91	RES,CHIP	100K	5%	1/10W
R124	1-216-097-91	RES,CHIP	100K	5%	1/10W
R131	1-216-833-91	RES,CHIP	10K	5%	1/16W
R133	1-216-827-11	METAL CHIP	3.3K	5%	1/16W
R134	1-216-832-11	METAL CHIP	8.2K	5%	1/16W
R135	1-216-089-91	RES,CHIP	47K	5%	1/10W
R136	1-216-073-00	METAL CHIP	10K	5%	1/10W
R137	1-216-864-11	METAL CHIP	0	5%	1/16W
R139	1-216-821-11	METAL CHIP	1K	5%	1/16W
R140	1-216-821-11	METAL CHIP	1K	5%	1/16W
R141	1-216-864-11	METAL CHIP	0	5%	1/16W
R201	1-216-845-11	METAL CHIP	100K	5%	1/16W
R202	1-216-097-91	RES,CHIP	100K	5%	1/10W
R203	1-216-845-11	METAL CHIP	100K	5%	1/16W
R204	1-216-864-11	METAL CHIP	0	5%	1/16W
R205	1-216-821-11	METAL CHIP	1K	5%	1/16W
R206	1-216-845-11	METAL CHIP	100K	5%	1/16W
R207	1-216-864-11	METAL CHIP	0	5%	1/16W
R208	1-216-821-11	METAL CHIP	1K	5%	1/16W
R209	1-216-230-00	RES,CHIP	22K	5%	1/8W
R210	1-216-821-11	METAL CHIP	1K	5%	1/16W
R211	1-216-809-11	METAL CHIP	100	5%	1/16W
R212	1-216-821-11	METAL CHIP	1K	5%	1/16W
R213	1-216-081-00	METAL CHIP	22K	5%	1/10W
R214	1-216-845-11	METAL CHIP	100K	5%	1/16W
R215	1-216-825-11	METAL CHIP	2.2K	5%	1/16W
R216	1-216-833-91	RES,CHIP	10K	5%	1/16W
R217	1-216-073-00	METAL CHIP	10K	5%	1/10W
R218	1-216-073-00	METAL CHIP	10K	5%	1/10W
R219	1-216-821-11	METAL CHIP	1K	5%	1/16W
R220	1-216-081-00	METAL CHIP	22K	5%	1/10W
R221	1-216-825-11	METAL CHIP	2.2K	5%	1/16W
R222	1-216-081-00	METAL CHIP	22K	5%	1/10W
R223	1-216-097-91	RES,CHIP	100K	5%	1/10W
R224	1-216-097-91	RES,CHIP	100K	5%	1/10W
R231	1-216-833-91	RES,CHIP	10K	5%	1/16W
R233	1-216-827-11	METAL CHIP	3.3K	5%	1/16W
R234	1-216-832-11	METAL CHIP	8.2K	5%	1/16W
R235	1-216-089-91	RES,CHIP	47K	5%	1/10W
R236	1-216-073-00	METAL CHIP	10K	5%	1/10W
R237	1-216-864-11	METAL CHIP	0	5%	1/16W
R239	1-216-821-11	METAL CHIP	1K	5%	1/16W
R240	1-216-821-11	METAL CHIP	1K	5%	1/16W
R241	1-216-864-11	METAL CHIP	0	5%	1/16W
R301	1-216-017-91	RES,CHIP	47	5%	1/10W
R306	1-216-017-91	RES,CHIP	47	5%	1/10W
R307	1-216-833-91	RES,CHIP	10K	5%	1/16W
R308	1-216-833-91	RES,CHIP	10K	5%	1/16W
R317	1-216-073-00	METAL CHIP	10K	5%	1/10W
R318	1-216-073-00	METAL CHIP	10K	5%	1/10W
R323	1-216-073-00	METAL CHIP	10K	5%	1/10W
R326	1-216-017-91	RES,CHIP	47	5%	1/10W
R329	1-216-097-91	RES,CHIP	100K	5%	1/10W
R330	1-216-097-91	RES,CHIP	100K	5%	1/10W
R331	1-216-833-91	RES,CHIP	10K	5%	1/16W
R332	1-216-833-91	RES,CHIP	10K	5%	1/16W
R337	1-216-097-91	RES,CHIP	100K	5%	1/10W
R347	1-216-089-91	RES,CHIP	47K	5%	1/10W
R401	1-216-805-11	METAL CHIP	47	5%	1/16W
R402	1-216-041-00	METAL CHIP	470	5%	1/10W
R403	1-216-049-91	RES,CHIP	1K	5%	1/10W
R404	1-216-839-11	METAL CHIP	33K	5%	1/16W
R405	1-216-833-91	RES,CHIP	10K	5%	1/16W
R406	1-216-821-11	METAL CHIP	1K	5%	1/16W
R407	1-216-049-91	RES,CHIP	1K	5%	1/10W
R408	1-216-809-11	METAL CHIP	100	5%	1/16W
R409	1-216-833-91	RES,CHIP	10K	5%	1/16W
R410	1-216-833-91	RES,CHIP	10K	5%	1/16W
R411	1-216-833-91	RES,CHIP	10K	5%	1/16W
R412	1-216-833-91	RES,CHIP	10K	5%	1/16W
R413	1-216-829-11	METAL CHIP	4.7K	5%	1/16W
R414	1-216-817-11	METAL CHIP	470	5%	1/16W
R415	1-216-817-11	METAL CHIP	470	5%	1/16W
R416	1-216-833-91	RES,CHIP	10K	5%	1/16W
R417	1-216-821-11	METAL CHIP	1K	5%	1/16W
R418	1-216-821-11	METAL CHIP	1K	5%	1/16W
R419	1-216-821-11	METAL CHIP	1K	5%	1/16W
R420	1-216-821-11	METAL CHIP	1K	5%	1/16W
R421	1-216-821-11	METAL CHIP	1K	5%	1/16W
R422	1-216-821-11	METAL CHIP	1K	5%	1/16W
R423	1-216-821-11	METAL CHIP	1K	5%	1/16W
R424	1-216-821-11	METAL CHIP	1K	5%	1/16W
R425	1-216-821-11	METAL CHIP	1K	5%	1/16W
R426	1-216-821-11	METAL CHIP	1K	5%	1/16W
R427	1-216-821-11	METAL CHIP	1K	5%	1/16W
R428	1-216-833-91	RES,CHIP	10K	5%	1/16W
R429	1-216-821-11	METAL CHIP	1K	5%	1/16W
R430	1-216-821-11	METAL CHIP	1K	5%	1/16W
R431	1-216-821-11	METAL CHIP	1K	5%	1/16W
R432	1-216-821-11	METAL CHIP	1K	5%	1/16W
R433	1-216-821-11	METAL CHIP	1K	5%	1/16W
R434	1-216-821-11	METAL CHIP	1K	5%	1/16W
R435	1-216-841-11	METAL CHIP	47K	5%	1/16W
R436	1-216-829-11	METAL CHIP	4.7K	5%	1/16W
R437	1-216-829-11	METAL CHIP	4.7K	5%	1/16W
R438	1-216-069-00	METAL CHIP	6.8K	5%	1/10W
R439	1-216-821-11	METAL CHIP	1K	5%	1/16W
R440	1-216-821-11	METAL CHIP	1K	5%	1/16W
R441	1-216-829-11	METAL CHIP	4.7K	5%	1/16W
R442	1-216-049-91	RES,CHIP	1K	5%	1/10W
R443	1-216-817-11	METAL CHIP	470	5%	1/16W
R444	1-216-817-11	METAL CHIP	470	5%	1/16W
R445	1-216-821-11	METAL CHIP	1K	5%	1/16W
R446	1-216-821-11	METAL CHIP	1K	5%	1/16W
R447	1-216-833-91	RES,CHIP	10K	5%	1/16W
R448	1-216-821-11	METAL CHIP	1K	5%	1/16W
R449	1-216-821-11	METAL CHIP	1K	5%	1/16W
R450	1-216-821-11	METAL CHIP	1K	5%	1/16W
R451	1-216-821-11	METAL CHIP	1K	5%	1/16W

Ref. No.	Part No.	Description			Remark
R452	1-216-833-91	RES,CHIP	10K	5%	1/16W
R453	1-216-821-11	METAL CHIP	1K	5%	1/16W
R454	1-216-817-11	METAL CHIP	470	5%	1/16W
R455	1-216-817-11	METAL CHIP	470	5%	1/16W
R456	1-216-821-11	METAL CHIP	1K	5%	1/16W
R457	1-216-041-00	METAL CHIP	470	5%	1/10W
R458	1-216-041-00	METAL CHIP	470	5%	1/10W
R459	1-216-833-91	RES,CHIP	10K	5%	1/16W
R460	1-216-821-11	METAL CHIP	1K	5%	1/16W
R461	1-216-821-11	METAL CHIP	1K	5%	1/16W
R462	1-216-821-11	METAL CHIP	1K	5%	1/16W
R463	1-216-809-11	METAL CHIP	100	5%	1/16W
R464	1-216-821-11	METAL CHIP	1K	5%	1/16W
R465	1-216-809-11	METAL CHIP	100	5%	1/16W
R466	1-216-837-11	METAL CHIP	22K	5%	1/16W
R467	1-216-817-11	METAL CHIP	470	5%	1/16W
R468	1-216-833-91	RES,CHIP	10K	5%	1/16W
R470	1-216-821-11	METAL CHIP	1K	5%	1/16W
R471	1-216-049-91	RES,CHIP	1K	5%	1/10W
R472	1-216-839-11	METAL CHIP	33K	5%	1/16W
R473	1-216-049-91	RES,CHIP	1K	5%	1/10W
R474	1-216-825-11	METAL CHIP	2.2K	5%	1/16W
R475	1-216-821-11	METAL CHIP	1K	5%	1/16W
R476	1-216-821-11	METAL CHIP	1K	5%	1/16W
R477	1-216-833-91	RES,CHIP	10K	5%	1/16W
R478	1-216-821-11	METAL CHIP	1K	5%	1/16W
R479	1-216-821-11	METAL CHIP	1K	5%	1/16W
R480	1-216-821-11	METAL CHIP	1K	5%	1/16W
R481	1-216-821-11	METAL CHIP	1K	5%	1/16W
R482	1-216-837-11	METAL CHIP	22K	5%	1/16W
R483	1-216-841-11	METAL CHIP	47K	5%	1/16W
R484	1-216-841-11	METAL CHIP	47K	5%	1/16W
R485	1-216-065-91	RES,CHIP	4.7K	5%	1/10W
R486	1-216-829-11	METAL CHIP	4.7K	5%	1/16W
R487	1-216-829-11	METAL CHIP	4.7K	5%	1/16W
R488	1-216-065-91	RES,CHIP	4.7K	5%	1/10W
R489	1-216-085-00	METAL CHIP	33K	5%	1/10W
R490	1-216-081-00	METAL CHIP	22K	5%	1/10W
R491	1-216-837-11	METAL CHIP	22K	5%	1/16W
R492	1-216-839-11	METAL CHIP	33K	5%	1/16W
R493	1-216-821-11	METAL CHIP	1K	5%	1/16W
R494	1-216-821-11	METAL CHIP	1K	5%	1/16W
R495	1-216-821-11	METAL CHIP	1K	5%	1/16W
R496	1-216-864-11	METAL CHIP	0	5%	1/16W
R497	1-216-073-00	METAL CHIP	10K	5%	1/10W
R498	1-216-061-00	METAL CHIP	3.3K	5%	1/10W
R499	1-216-061-00	METAL CHIP	3.3K	5%	1/10W
R500	1-216-296-00	METAL CHIP	0	5%	1/8W
R501	1-216-833-91	RES,CHIP	10K	5%	1/16W
R502	1-216-833-91	RES,CHIP	10K	5%	1/16W
R503	1-216-833-91	RES,CHIP	10K	5%	1/16W
R504	1-216-073-00	METAL CHIP	10K	5%	1/10W
R505	1-216-821-11	METAL CHIP	1K	5%	1/16W
R506	1-216-821-11	METAL CHIP	1K	5%	1/16W
R507	1-216-821-11	METAL CHIP	1K	5%	1/16W
R700	1-216-835-11	METAL CHIP	15K	5%	1/16W
R701	1-216-833-91	RES,CHIP	10K	5%	1/16W
R703	1-216-855-11	METAL CHIP	680K	5%	1/16W
R706	1-216-847-11	METAL CHIP	150K	5%	1/16W
R710	1-218-273-11	RES,CHIP	510K	5%	1/16W
R711	1-216-847-11	METAL CHIP	150K	5%	1/16W
R712	1-216-845-11	METAL CHIP	100K	5%	1/16W
R713	1-216-841-11	METAL CHIP	47K	5%	1/16W
R714	1-216-841-11	METAL CHIP	47K	5%	1/16W
R715	1-216-847-11	METAL CHIP	150K	5%	1/16W
R716	1-216-845-11	METAL CHIP	100K	5%	1/16W
R718	1-216-817-11	RES,CHIP	470	5%	1/16W
R719	1-216-041-00	METAL CHIP	470	5%	1/10W
R720	1-216-817-11	METAL CHIP	470	5%	1/16W
R721	1-216-845-11	METAL CHIP	100K	5%	1/16W
R722	1-216-845-11	METAL CHIP	100K	5%	1/16W
R723	1-216-845-11	METAL CHIP	100K	5%	1/16W
R724	1-216-845-11	METAL CHIP	100K	5%	1/16W
R725	1-216-845-11	METAL CHIP	100K	5%	1/16W
R726	1-216-845-11	METAL CHIP	100K	5%	1/16W
R731	1-216-835-11	METAL CHIP	15K	5%	1/16W
R732	1-216-839-11	METAL CHIP	33K	5%	1/16W
R733	1-216-845-11	METAL CHIP	100K	5%	1/16W
R734	1-216-001-00	METAL CHIP	10	5%	1/10W
R735	1-216-833-91	RES,CHIP	10K	5%	1/16W
R741	1-216-849-11	METAL CHIP	220K	5%	1/16W
R742	1-216-847-11	METAL CHIP	150K	5%	1/16W
R743	1-216-847-11	METAL CHIP	150K	5%	1/16W
R745	1-216-851-11	METAL CHIP	330K	5%	1/16W
R750	1-216-827-11	METAL CHIP	3.3K	5%	1/16W
R751	1-216-835-11	METAL CHIP	15K	5%	1/16W
R752	1-216-839-11	METAL CHIP	33K	5%	1/16W
R753	1-216-821-11	METAL CHIP	1K	5%	1/16W
R754	1-216-837-11	METAL CHIP	22K	5%	1/16W
R755	1-216-841-11	METAL CHIP	47K	5%	1/16W
R756	1-216-833-91	RES,CHIP	10K	5%	1/16W
R758	1-216-829-11	METAL CHIP	4.7K	5%	1/16W
R760	1-216-097-91	RES,CHIP	100K	5%	1/10W
R762	1-216-853-11	METAL CHIP	470K	5%	1/16W
R763	1-216-827-11	METAL CHIP	3.3K	5%	1/16W
R764	1-216-061-00	METAL CHIP	3.3K	5%	1/10W
R765	1-216-833-91	RES,CHIP	10K	5%	1/16W
R766	1-216-857-11	METAL CHIP	1M	5%	1/16W
R767	1-216-833-91	RES,CHIP	10K	5%	1/16W
R768	1-216-833-91	RES,CHIP	10K	5%	1/16W
R769	1-216-041-00	METAL CHIP	470	5%	1/10W
R770	1-216-821-11	METAL CHIP	1K	5%	1/16W
R771	1-216-864-11	METAL CHIP	0	5%	1/16W
R772	1-216-033-00	METAL CHIP	220	5%	1/10W
R775	1-216-864-11	METAL CHIP	0	5%	1/16W
R776	1-216-073-00	METAL CHIP	10K	5%	1/10W
R777	1-216-821-11	METAL CHIP	1K	5%	1/16W
R778	1-216-821-11	METAL CHIP	1K	5%	1/16W
R780	1-216-821-11	METAL CHIP	1K	5%	1/16W
R781	1-216-073-00	METAL CHIP	10K	5%	1/10W
R786	1-216-295-00	METAL CHIP	0	5%	1/10W
R787	1-216-821-11	METAL CHIP	1K	5%	1/16W
R788	1-216-821-11	METAL CHIP	1K	5%	1/16W
R789	1-216-809-11	METAL CHIP	100	5%	1/16W
R790	1-216-049-91	RES,CHIP	1K	5%	1/10W

MAIN **MOTOR** **POWER**

Ref. No.	Part No.	Description			Remark
R791	1-216-821-11	METAL CHIP	1K	5%	1/16W
R792	1-216-809-11	METAL CHIP	100	5%	1/16W
R793	1-216-821-11	METAL CHIP	1K	5%	1/16W
R794	1-216-817-11	METAL CHIP	470	5%	1/16W
R795	1-216-813-11	METAL CHIP	220	5%	1/16W
R796	1-216-821-11	METAL CHIP	1K	5%	1/16W
R797	1-216-821-11	METAL CHIP	1K	5%	1/16W
R798	1-216-821-11	METAL CHIP	1K	5%	1/16W
R799	1-216-821-11	METAL CHIP	1K	5%	1/16W
		< VIBRATOR >			
X401	1-781-050-21	VIBRATOR, CERAMIC (8MHz)			
X402	1-767-697-11	VIBRATOR, CRYSTAL (32kHz)			
X403	1-760-556-11	VIBRATOR, CRYSTAL (4.332MHz)			
X701	1-767-226-11	VIBRATOR, CRYSTAL (16.9344MHz)			
**********					
*	A-3323-155-A	MOTOR BOARD, COMPLETE			
		**********			
		< CAPACITOR >			
C789	1-107-725-11	CERAMIC CHIP	0.1uF	10%	16V
C795	1-126-925-11	ELECT	470uF	20%	10V
C796	1-163-021-91	CERAMIC CHIP	0.01uF	10%	50V
C797	1-163-021-91	CERAMIC CHIP	0.01uF	10%	50V
		< CONNECTOR >			
* CN712	1-580-154-11	PIN, CONNECTOR (PC BOARD) 2P			
		< DIODE >			
D761	8-719-988-61	DIODE 1SS355TE-17			
D762	8-719-988-61	DIODE 1SS355TE-17			
		< IC >			
IC711	8-759-565-65	IC BA6289F-E2			
		< COIL >			
L711	1-414-743-21	INDUCTOR	47uH		
L712	1-414-743-21	INDUCTOR	47uH		
		< TRANSISTOR >			
Q761	8-729-028-66	TRANSISTOR DTC115EKA-T146			
Q762	8-729-027-26	TRANSISTOR DTA114YKA-T146			
Q763	8-729-027-46	TRANSISTOR DTC114YKA-T146			
Q764	8-729-903-46	TRANSISTOR 2SB1132-P			
Q765	8-729-027-46	TRANSISTOR DTC114YKA-T146			
Q766	8-729-027-46	TRANSISTOR DTC114YKA-T146			
		< RESISTOR >			
R728	1-216-071-00	METAL CHIP	8.2K	5%	1/10W
R744	1-216-081-00	METAL CHIP	22K	5%	1/10W
R746	1-216-073-00	METAL CHIP	10K	5%	1/10W
R747	1-216-081-00	METAL CHIP	22K	5%	1/10W
R748	1-216-079-00	METAL CHIP	18K	5%	1/10W
R749	1-216-079-00	METAL CHIP	18K	5%	1/10W
R759	1-216-089-91	RES,CHIP	47K	5%	1/10W
⚠R761	1-212-954-11	FUSIBLE	6.8	5%	1/2W F
R779	1-216-041-00	METAL CHIP	470	5%	1/10W

Ref. No.	Part No.	Description			Remark
		< SWITCH >			
S761	1-572-126-21	SWITCH, PUSH (1 KEY) (OPEN)			
S762	1-572-126-21	SWITCH, PUSH (1 KEY) (CLOSE)			
**********					
*	1-671-313-21	POWER BOARD			
		**********			
	1-533-217-31	HOLDER, FUSE			
*	3-028-880-01	HEAT SINK (DIODE)			
	7-685-646-79	SCREW +BVTP 3X8 TYPE2 N-S			
		< CAPACITOR >			
C901	1-163-037-11	CERAMIC CHIP	0.022uF	10%	25V
C902	1-163-037-11	CERAMIC CHIP	0.022uF	10%	25V
C903	1-163-037-11	CERAMIC CHIP	0.022uF	10%	25V
C904	1-163-037-11	CERAMIC CHIP	0.022uF	10%	25V
C905	1-163-037-11	CERAMIC CHIP	0.022uF	10%	25V
C906	1-163-037-11	CERAMIC CHIP	0.022uF	10%	25V
C907	1-163-037-11	CERAMIC CHIP	0.022uF	10%	25V
C908	1-163-037-11	CERAMIC CHIP	0.022uF	10%	25V
C909	1-163-037-11	CERAMIC CHIP	0.022uF	10%	25V
C910	1-163-037-11	CERAMIC CHIP	0.022uF	10%	25V
C911	1-163-037-11	CERAMIC CHIP	0.022uF	10%	25V
C912	1-163-037-11	CERAMIC CHIP	0.022uF	10%	25V
C913	1-163-021-91	CERAMIC CHIP	0.01uF	10%	50V
C914	1-163-021-91	CERAMIC CHIP	0.01uF	10%	50V
C916	1-163-021-91	CERAMIC CHIP	0.01uF	10%	50V
C917	1-163-021-91	CERAMIC CHIP	0.01uF	10%	50V
		< CONNECTOR >			
* CN901	1-564-522-11	PLUG, CONNECTOR 7P			
* CN902	1-580-154-11	PIN, CONNECTOR (PC BOARD) 2P			
* CN904	1-564-519-11	PLUG, CONNECTOR 4P			
		< DIODE >			
D901	8-719-302-38	DIODE RBV-602-01			
D903	8-719-510-53	DIODE D4SB60L			
D904	8-719-914-43	DIODE DAN202K			
D905	8-719-970-02	DIODE 1SR139-400			
D906	8-719-970-02	DIODE 1SR139-400			
D907	8-719-970-02	DIODE 1SR139-400			
D908	8-719-970-02	DIODE 1SR139-400			
		< FUSE >			
⚠F901	1-532-467-51	FUSE (T0.315AL/250V)			
⚠F902	1-532-505-51	FUSE (T5AL/250V)			
⚠F903	1-532-499-51	FUSE (T0.4AL/250V)			
⚠F904	1-532-388-51	FUSE (T2AL/250V)			
		< JACK >			
⚠J901	1-526-838-11	INLET, AC 2P (~ AC IN)			
		< RESISTOR >			
R901	1-216-073-00	METAL CHIP	10K	5%	1/10W
R902	1-216-057-00	METAL CHIP	2.2K	5%	1/10W

The components identified by mark ⚠ or dotted line with mark ⚠ are critical for safety.
Replace only with part number specified.

Ref. No.	Part No.	Description			Remark
		< TRANSFORMER >			
⚠T901	1-433-781-11	TRANSFORMER, POWER			
⚠T902	1-433-630-11	TRANSFORMER, LINE FILTER (LFT)			
**********					
*	1-661-774-11	SW BOARD			
		*********			
		< CONNECTOR >			
CN601	1-770-698-11	CONNECTOR, FFC/FPC 15P			
CN602	1-778-638-21	PIN, CONNECTOR (PC BOARD) 2P			
CN603	1-778-638-21	PIN, CONNECTOR (PC BOARD) 2P			
		< SWITCH >			
S681	1-572-467-61	SWITCH, PUSH (1 KEY) (LIMIT IN)			
S682	1-692-377-31	SWITCH, PUSH (1 KEY) (REFLECT)			
S683	1-692-847-21	SWITCH, PUSH (1 KEY) (PROTECT)			
S685	1-572-467-61	SWITCH, PUSH (1 KEY) (CHUCKING IN)			
S686	1-762-621-21	SWITCH, PUSH (1 KEY) (PACK OUT)			
S687	1-572-688-11	SWITCH, PUSH (1 KEY) (PB POSITION)			
S688	1-762-621-21	SWITCH, PUSH (1 KEY) (REC POSITION)			
**********					
*	A-3323-154-A	TUNER BOARD, COMPLETE			
		**********			
		< CAPACITOR >			
C1	1-163-243-11	CERAMIC CHIP	47PF	5%	50V
C2	1-163-113-00	CERAMIC CHIP	68PF	5%	50V
C3	1-163-037-11	CERAMIC CHIP	0.022uF	10%	25V
C4	1-163-132-00	CERAMIC CHIP	430PF	5%	50V
C5	1-163-263-11	CERAMIC CHIP	330PF	5%	50V
C6	1-163-231-11	CERAMIC CHIP	15PF	5%	50V
C7	1-163-037-11	CERAMIC CHIP	0.022uF	10%	25V
C8	1-163-021-91	CERAMIC CHIP	0.01uF	10%	50V
C13	1-163-021-91	CERAMIC CHIP	0.01uF	10%	50V
C14	1-162-959-11	CERAMIC CHIP	330PF	5%	50V
C15	1-163-259-91	CERAMIC CHIP	220PF	5%	50V
C16	1-163-263-11	CERAMIC CHIP	330PF	5%	50V
C17	1-164-344-11	CERAMIC CHIP	0.068uF	10%	25V
C18	1-164-345-11	CERAMIC CHIP	0.082uF	10%	25V
C19	1-126-964-11	ELECT	10uF	20%	50V
C20	1-126-963-11	ELECT	4.7uF	20%	50V
C21	1-104-665-11	ELECT	100uF	20%	10V
C22	1-163-021-91	CERAMIC CHIP	0.01uF	10%	50V
C23	1-163-021-91	CERAMIC CHIP	0.01uF	10%	50V
C24	1-163-986-00	CERAMIC CHIP	0.027uF	10%	25V
C25	1-163-986-00	CERAMIC CHIP	0.027uF	10%	25V
C26	1-126-960-11	ELECT	1uF	20%	50V
C27	1-126-960-11	ELECT	1uF	20%	50V
C28	1-162-964-11	CERAMIC CHIP	0.001uF	10%	50V
C29	1-162-964-11	CERAMIC CHIP	0.001uF	10%	50V
C30	1-162-970-11	CERAMIC CHIP	0.01uF	10%	25V
C31	1-163-227-11	CERAMIC CHIP	10PF	0.5PF	50V
C32	1-163-227-11	CERAMIC CHIP	10PF	0.5PF	50V
C33	1-137-194-91	FILM	0.47uF	5%	50V
C34	1-126-935-11	ELECT	470uF	20%	6.3V
C35	1-162-970-11	CERAMIC CHIP	0.01uF	10%	25V
C36	1-162-964-11	CERAMIC CHIP	0.001uF	10%	50V
C37	1-162-964-11	CERAMIC CHIP	0.001uF	10%	50V
C38	1-164-505-11	CERAMIC CHIP	2.2uF		16V
C39	1-162-970-11	CERAMIC CHIP	0.01uF	10%	25V
C40	1-126-934-11	ELECT	220uF	20%	16V
C41	1-162-970-11	CERAMIC CHIP	0.01uF	10%	25V
C42	1-162-970-11	CERAMIC CHIP	0.01uF	10%	25V
C43	1-163-021-91	CERAMIC CHIP	0.01uF	10%	50V
C44	1-164-227-11	CERAMIC CHIP	0.022uF	10%	25V
C45	1-163-133-00	CERAMIC CHIP	470PF	5%	50V
C46	1-164-345-11	CERAMIC CHIP	0.082uF	10%	25V
C47	1-163-021-91	CERAMIC CHIP	0.01uF	10%	50V
C48	1-162-970-11	CERAMIC CHIP	0.01uF	10%	25V
C49	1-126-934-11	ELECT	220uF	20%	10V
C50	1-163-021-91	CERAMIC CHIP	0.01uF	10%	50V
C51	1-163-263-11	CERAMIC CHIP	330PF	5%	50V
C53	1-163-021-91	CERAMIC CHIP	0.01uF	10%	50V
C54	1-162-968-11	CERAMIC CHIP	0.0047uF	10%	50V
C55	1-164-315-11	CERAMIC CHIP	470PF	5%	50V
C56	1-164-315-11	CERAMIC CHIP	470PF	5%	50V
C58	1-163-021-91	CERAMIC CHIP	0.01uF	10%	50V
C61	1-162-957-11	CERAMIC CHIP	220PF	5%	50V
C62	1-163-205-00	CERAMIC CHIP	0.001uF	5%	50V
C63	1-163-205-00	CERAMIC CHIP	0.001uF	5%	50V
C64	1-163-009-11	CERAMIC CHIP	0.001uF	10%	50V
C65	1-126-964-11	ELECT	10uF	20%	50V
C67	1-163-243-11	CERAMIC CHIP	47PF	5%	50V
C68	1-163-038-91	CERAMIC CHIP	0.1uF		25V
C71	1-163-021-91	CERAMIC CHIP	0.01uF	10%	50V
		< FILTER >			
CF1	1-579-762-11	VIBRATOR, CERAMIC			
CF2	1-781-407-11	FILTER, CERAMIC			
CF3	1-781-407-11	FILTER, CERAMIC			
CF4	1-781-407-11	FILTER, CERAMIC			
CF5	1-760-125-11	DISCRIMINATOR, CERAMIC			
		< COMPOSITION CIRCUIT BLOCK >			
CFT1	1-233-885-11	ENCAPSULATED COMPONENT (MW/LW IF)			
		< TRIMMER >			
CT1	1-141-459-11	CAP, TRIMMER (SEAL TYPE) 45PF (LW TRACKING)			
CT2	1-141-410-11	CAP, ADJ 10PF (MW TRACKING)			
CT3	1-141-459-11	CAP, TRIMMER (SEAL TYPE) 45PF (LW FREQUENCY COVERAGE)			
CT4	1-141-410-11	CAP, ADJ 10PF (MW FREQUENCY COVERAGE)			
		< DIODE >			
D1	8-719-049-75	DIODE KV1520TL00			
D4	8-719-988-61	DIODE 1SS355TE-17			
D5	8-719-988-61	DIODE 1SS355TE-17			
D6	8-719-988-61	DIODE 1SS355TE-17			
D7	8-719-988-61	DIODE 1SS355TE-17			
D8	8-719-988-61	DIODE 1SS355TE-17			
D9	8-719-988-61	DIODE 1SS355TE-17			
D10	8-719-988-61	DIODE 1SS355TE-17			
D11	8-719-988-61	DIODE 1SS355TE-17			
D12	8-719-988-61	DIODE 1SS355TE-17			

The components identified by mark ⚠ or dotted line with mark ⚠ are critical for safety.
Replace only with part number specified.

TUNER

Ref. No.	Part No.	Description			Remark
		< FERRITE BEAD >			
FB1	1-414-598-11	INDUCTOR CHIP			
FB2	1-414-598-11	INDUCTOR CHIP			
FB4	1-414-598-11	INDUCTOR CHIP			
FB5	1-414-598-11	INDUCTOR CHIP			
FB6	1-414-598-11	INDUCTOR CHIP			
FB7	1-414-598-11	INDUCTOR CHIP			
FB9	1-216-295-00	METAL CHIP	0	5%	1/10W
		< IC >			
IC1	8-759-386-02	IC TA2008AN			
IC2	8-759-483-40	IC LC72137M-TLM			
		< JUMPER RESISTOR >			
JC1	1-216-295-00	METAL CHIP	0	5%	1/10W
JC5	1-216-295-00	METAL CHIP	0	5%	1/10W
JC6	1-216-295-00	METAL CHIP	0	5%	1/10W
JC7	1-216-295-00	METAL CHIP	0	5%	1/10W
		< COIL >			
L1	1-414-170-11	INDUCTOR CHIP 100uH			
L2	1-410-993-11	INDUCTOR CHIP 1uH			
L3	1-416-129-11	COIL, LW ANT (LW TRACKING)			
L4	1-416-991-11	COIL, AM ANT (MW TRACKING)			
L5	1-411-959-11	COIL, AM OSC (MW FREQUENCY COVERAGE)			
L9	1-233-306-31	ENCAPSULATED COMPONENT (FM IF)			
L10	1-500-284-21	INDUCTOR CHIP			
		< TRANSISTOR >			
Q3	8-729-119-32	TRANSISTOR 2SK193			
Q4	8-729-920-31	TRANSISTOR DTC343TK			
Q5	8-729-920-38	TRANSISTOR 2SC2059K-N			
Q6	8-729-931-02	TRANSISTOR 2SC2413KQ			
Q7	8-729-120-28	TRANSISTOR 2SC1623-L5L6			
Q8	1-801-806-11	TRANSISTOR DTC144EKA-T146			
Q9	8-729-904-07	TRANSISTOR FMG2			
Q10	8-729-920-31	TRANSISTOR DTC343TK			
Q11	8-729-920-41	TRANSISTOR FMC3			
Q12	8-729-039-73	TRANSISTOR FMA5A-T148			
Q13	8-729-901-04	TRANSISTOR DTA114EK			
Q14	8-729-931-02	TRANSISTOR 2SC2413KQ			
Q15	8-729-920-31	TRANSISTOR DTC343TK			
		< RESISTOR >			
R2	1-216-037-00	METAL CHIP	330	5%	1/10W
R3	1-216-049-91	RES,CHIP	1K	5%	1/10W
R4	1-216-057-00	METAL CHIP	2.2K	5%	1/10W
R5	1-216-065-91	RES,CHIP	4.7K	5%	1/10W
R6	1-216-073-00	METAL CHIP	10K	5%	1/10W
R7	1-216-097-91	RES,CHIP	100K	5%	1/10W
R8	1-216-065-91	RES,CHIP	4.7K	5%	1/10W
R9	1-216-077-00	METAL CHIP	15K	5%	1/10W
R16	1-216-105-91	RES,CHIP	220K	5%	1/10W
R17	1-216-059-00	METAL CHIP	2.7K	5%	1/10W
R18	1-216-049-91	RES,CHIP	1K	5%	1/10W
R19	1-216-081-00	METAL CHIP	22K	5%	1/10W
R20	1-216-825-11	METAL CHIP	2.2K	5%	1/16W
R21	1-216-017-91	RES,CHIP	47	5%	1/10W
R22	1-216-041-00	METAL CHIP	470	5%	1/10W
R23	1-216-049-91	RES,CHIP	1K	5%	1/10W
R25	1-216-023-00	METAL CHIP	82	5%	1/10W
R26	1-216-829-11	METAL CHIP	4.7K	5%	1/16W
R27	1-216-837-11	METAL CHIP	22K	5%	1/16W
R28	1-216-833-91	RES,CHIP	10K	5%	1/16W
R29	1-216-821-11	METAL CHIP	1K	5%	1/16W
R30	1-216-047-91	RES,CHIP	820	5%	1/10W
R31	1-216-073-00	METAL CHIP	10K	5%	1/10W
R33	1-216-073-00	METAL CHIP	10K	5%	1/10W
R35	1-216-049-91	RES,CHIP	1K	5%	1/10W
R36	1-216-821-11	METAL CHIP	1K	5%	1/16W
R37	1-216-833-91	RES,CHIP	10K	5%	1/16W
R38	1-216-833-91	RES,CHIP	10K	5%	1/16W
R39	1-216-821-11	METAL CHIP	1K	5%	1/16W
R40	1-216-821-11	METAL CHIP	1K	5%	1/16W
R41	1-216-829-11	METAL CHIP	4.7K	5%	1/16W
R42	1-216-809-11	METAL CHIP	100	5%	1/16W
R43	1-216-057-00	METAL CHIP	2.2K	5%	1/10W
R46	1-216-864-11	METAL CHIP	0	5%	1/16W
R47	1-216-864-11	METAL CHIP	0	5%	1/16W
R48	1-216-841-11	METAL CHIP	47K	5%	1/16W
R49	1-216-841-11	METAL CHIP	47K	5%	1/16W
R50	1-216-841-11	METAL CHIP	47K	5%	1/16W
R51	1-216-825-11	METAL CHIP	2.2K	5%	1/16W
R52	1-216-821-11	METAL CHIP	1K	5%	1/16W
R53	1-216-824-11	METAL CHIP	1.8K	5%	1/16W
R54	1-216-009-91	RES,CHIP	22	5%	1/10W
R55	1-216-841-11	METAL CHIP	47K	5%	1/16W
R57	1-216-057-00	METAL CHIP	2.2K	5%	1/10W
R58	1-216-827-11	METAL CHIP	3.3K	5%	1/16W
R59	1-216-831-11	METAL CHIP	6.8K	5%	1/16W
R61	1-216-864-11	METAL CHIP	0	5%	1/16W
R62	1-216-295-00	METAL CHIP	0	5%	1/10W
R63	1-216-017-91	RES,CHIP	47	5%	1/10W
R64	1-216-295-00	METAL CHIP	0	5%	1/10W
R65	1-216-829-11	METAL CHIP	4.7K	5%	1/16W
R66	1-216-049-91	METAL CHIP	1K	5%	1/10W
R67	1-216-841-11	METAL CHIP	47K	5%	1/16W
		< TERMINAL >			
TB1	1-537-489-21	TERMINAL BOARD (ANT) (FM EXT ANTENNA, MW/LW ANTENNA)			
		< TUNER UNIT >			
* TU1	1-693-378-11	TUNER UNIT			
		< VIBRATOR >			
X1	1-760-130-11	VIBRATOR, CRYSTAL (75kHz)			
**********					
		MISCELLANEOUS			
		**********			
2	1-533-217-31	HOLDER, FUSE			
64	1-410-397-21	FERRITE BEAD INDUCTOR			
114	1-783-958-11	WIRE, PARALLEL (FFC) (11 CORE)			

Ref. No.	Part No.	Description	Remark
115	1-783-957-11	WIRE, PARALLEL (FFC) (8 CORE)	
116	1-783-956-11	WIRE, PARALLEL (FFC) (9 CORE)	
117	1-783-960-11	WIRE, PARALLEL (FFC) (26 CORE)	
* 122	1-562-327-00	SOCKET, CONNECTOR 3P	
151	1-783-955-11	WIRE, PARALLEL (FFC) (16 CORE)	
159	1-452-732-11	MAGNET	
203	1-783-961-11	WIRE, PARALLEL (FFC) (19 CORE)	
211	1-660-966-11	OP RALAY FLEXIBLE BOARD	
212	1-777-517-11	WIRE, PARALLEL (15 CORE)	
214	1-783-962-11	WIRE, PARALLEL (FFC) (29 CORE)	
⚠267	8-583-028-02	OPTICAL PICK-UP KMS-260A	
⚠304	8-848-483-05	OPTICAL PICK-UP KSS-213C	
305	X-2626-202-1	MOTOR SHASSIS ASSY(MB) (INCLUDING M702)(SPINDLE)	
ANT1	1-754-023-11	ANTENNA, TELESCOPIC	
D901	8-719-302-38	DIODE RBV-602-01	
⚠F901	1-532-467-51	FUSE (T0.315AL/250V)	
⚠F902	1-532-505-51	FUSE (T5AL/250V)	
⚠F903	1-532-499-51	FUSE (T0.4AL/250V)	
⚠F904	1-532-388-51	FUSE (T2AL/250V)	
HR901	1-500-396-11	HEAD, OVER WRITE	
LCD1	1-803-283-11	LCD UNIT	
M701	X-2625-769-1	MOTOR GEAR ASSY (MB) (INCLUDING GEAR) (SLED)	
M703	1-763-224-11	MOTOR, DC (DOOR OPEN/CLOSE)	
M901	A-4672-135-A	MOTOR ASSY, SPINDLE (SPINDLE)	
M902	A-4672-133-A	MOTOR ASSY, SLED (SLED) (INCLUDING GEAR)	
M903	A-4672-134-A	MOTOR ASSY, LOADING (LOADING) (INCLUDING GEAR)	
SP301	1-505-829-11	SPEAKER (8cm) (L-CH)	
SP302	1-529-130-11	SPEAKER (8cm) (R-CH)	
⚠T901	1-433-781-11	TRANSFORMER, POWER	
**********			
		ACCESSORIES & PACKING MATERIALS	
		**********	
	1-501-374-11	ANTENNA, LOOP	
⚠	1-769-412-13	CORD, POWER	
⚠	1-770-019-11	ADAPTOR, CONVERSION PLUG 3P (UK)	
	3-704-222-11	LABEL, SERIAL NUMBER (PRINTER)	
	3-864-598-11	MANUAL, INSTRUCTION (ENGLISH, SPANISH)	
	3-864-598-21	MANUAL, INSTRUCTION (FRENCH,GERMAN) (AEP, Tourist)	
	3-864-598-31	MANUAL, INSTRUCTION (DUTCH, PORTUGUESE) (AEP, Tourist)	
	3-864-598-41	MANUAL, INSTRUCTION (SWEDISH, FINNISH) (AEP, Tourist)	
	3-864-598-51	MANUAL, INSTRUCTION (ITALIAN) (AEP, Tourist)	
	8-917-663-90	REMOTE COMMANDER RMT-CM50AD	
	4-991-047-01	LID, BATTERY CASE (FOR RMT-CM50AD)	
**********			
		**********	
		HARDWARE LIST	
		**********	
#1	7-627-552-27	SCREW,PRECISION +P 1.7X2	
#2	7-627-553-17	PRECISION SCREW +P 2X2 TYPE 3	
#3	7-627-852-28	+P 1.7X3	
#4	7-685-133-19	SCREW +P 2.6X6 TYPE2 SLIT	
#5	7-685-647-79	SCREW +BVTP 3X10 TYPE2 N-S	
#6	7-685-850-01	SCREW +BVTT 2X3 (S)	
#7	7-685-851-04	SCREW +BVTT 2X4 (S)	
#8	7-685-872-09	SCREW +BVTT 3X8 (S)	
#9	7-685-648-79	SCREW +BVTP 3X12 TYPE2 N-S	
#10	7-685-649-79	SCREW +BVTP 3X14 TYPE2 N-S	
#11	7-685-651-79	SCREW +BVTP 3X20 TYPE2 N-S	
#12	7-685-871-09	SCREW +BVTT 3X6 (S)	
#13	7-685-534-19	SCREW +BTP 2.6X8 TYPE2 N-S	
#14	7-685-535-19	SCREW +BTP 2.6X10 TYPE2 N-S	
#15	7-621-773-86	SCREW +B 2.6X4	
#16	7-621-772-00	SCREW +B 2X3	
#17	7-685-862-09	SCREW +BVTT 2.6X6 (S)	
#18	7-685-661-79	SCREW +BVTP 4X12 TYPE2 N-S	
#19	7-623-508-01	LUG, 3	
#20	7-685-646-79	SCREW +BVTP 3X8 TYPE2 N-S	

The components identified by mark ⚠ or dotted line with mark ⚠ are critical for safety.
Replace only with part number specified.

9-924-996-12

Sony Corporation
Personal Audio Company

99G02032-1
Printed in Japan © 1999.7
Published by General Engineering Dept.